GATE ACCESSORIES

ACCESSORI PER CANCELLI E PORTONI 2014

ACCESSORI PER CANCELLI E PORTONI
GATE ACCESSORIES

CATALOGO/CATALOGUE 2014

FAC®

PASSIONE RICERCA EVOLUZIONE DAL 1973

FAC racconta una storia di passione per la componentistica meccanica e di ricerca della perfezione. Ogni accessorio per cancelli e portoni è concepito per diventare il punto di forza su cui il progetto del cliente può fare affidamento nel tempo.

Una storia di evoluzione continua dal 1973.

Nel campo degli accessori meccanici per cancelli e portoni a uso residenziale e industriale, FAC rappresenta l'essenza del **Made in Italy**: creatività nella ricerca delle soluzioni, qualità e tecnologia, ingredienti che sanno dare un tocco inconfondibile ad ogni realizzazione.

PASSION, RESEARCH, EVOLUTION. SINCE 1973

FAC is a story of passion for mechanical components in a continuous pursuit of perfection. Every single gate and door accessory is designed with the intent to satisfy the client's technical requirements and to rely on its high quality which will last in time.

FAC is a history of continuous evolution since 1973.

In the field of mechanical accessories, and hardware for gates and doors, for use on both residential and industrial applications, FAC represents the essence of the **Made in Italy**: creativity in finding solutions, quality and technology, ingredients that can give a unique touch to the realization of every project.

NOVITÀ DEL CATALOGO 2014

Il catalogo prodotti si aggiorna e diventa uno strumento di consultazione chiaro ed immediato, per favorire il lavoro dei nostri partner.
Una **nuova codifica** dei prodotti rende più semplice individuare l'articolo desiderato, partendo dalle famiglie più ampie e scendendo gradualmente nel dettaglio. Tutte le **novità di prodotto** sono evidenziate dall'icona NEW

Dal 2014 FAC presenta dei **Kit di prodotti**, nati per progetti mirati; ogni sezione si conclude con l'illustrazione dei Kit inerenti al tipo di cancello specifico: telescopico, a rotaia, autoportante classico e antisfondamento (Guardian). Un nuovo capitolo interamente dedicato ai **Ricambi**.

Chiude il catalogo la **tabella di conversione** dai vecchi codici ai nuovi, per guidare la consultazione di quanti erano abituati alla prima numerazione degli articoli.

CERTIFICAZIONI DI QUALITÀ
A garanzia di un alto standard qualitativo e di una maggiore efficienza interna, l'azienda è certificata secondo la normativa **UNI EN ISO 9001**.
FAC offre inoltre il supporto per la marcatura CE dei cancelli, secondo la normativa **UNI EN 13241**.

SISTEMA DI GESTIONE PER LA QUALITÀ CERTIFICATO = UNI EN ISO 9001:2008 =
SINCERT DNV

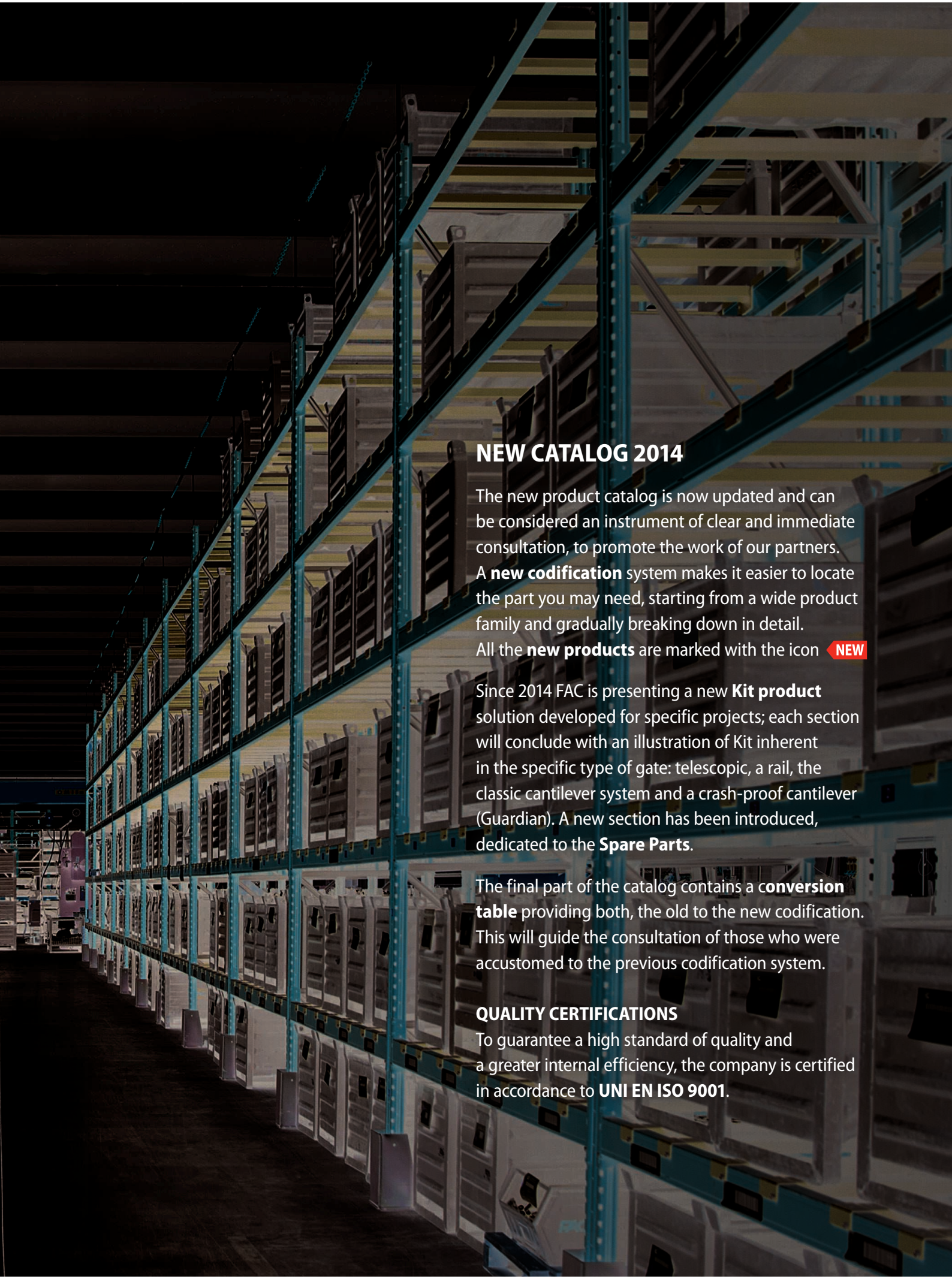

NEW CATALOG 2014

The new product catalog is now updated and can be considered an instrument of clear and immediate consultation, to promote the work of our partners. A **new codification** system makes it easier to locate the part you may need, starting from a wide product family and gradually breaking down in detail. All the **new products** are marked with the icon NEW

Since 2014 FAC is presenting a new **Kit product** solution developed for specific projects; each section will conclude with an illustration of Kit inherent in the specific type of gate: telescopic, a rail, the classic cantilever system and a crash-proof cantilever (Guardian). A new section has been introduced, dedicated to the **Spare Parts**.

The final part of the catalog contains a c**onversion table** providing both, the old to the new codification. This will guide the consultation of those who were accustomed to the previous codification system.

QUALITY CERTIFICATIONS

To guarantee a high standard of quality and a greater internal efficiency, the company is certified in accordance to **UNI EN ISO 9001**.

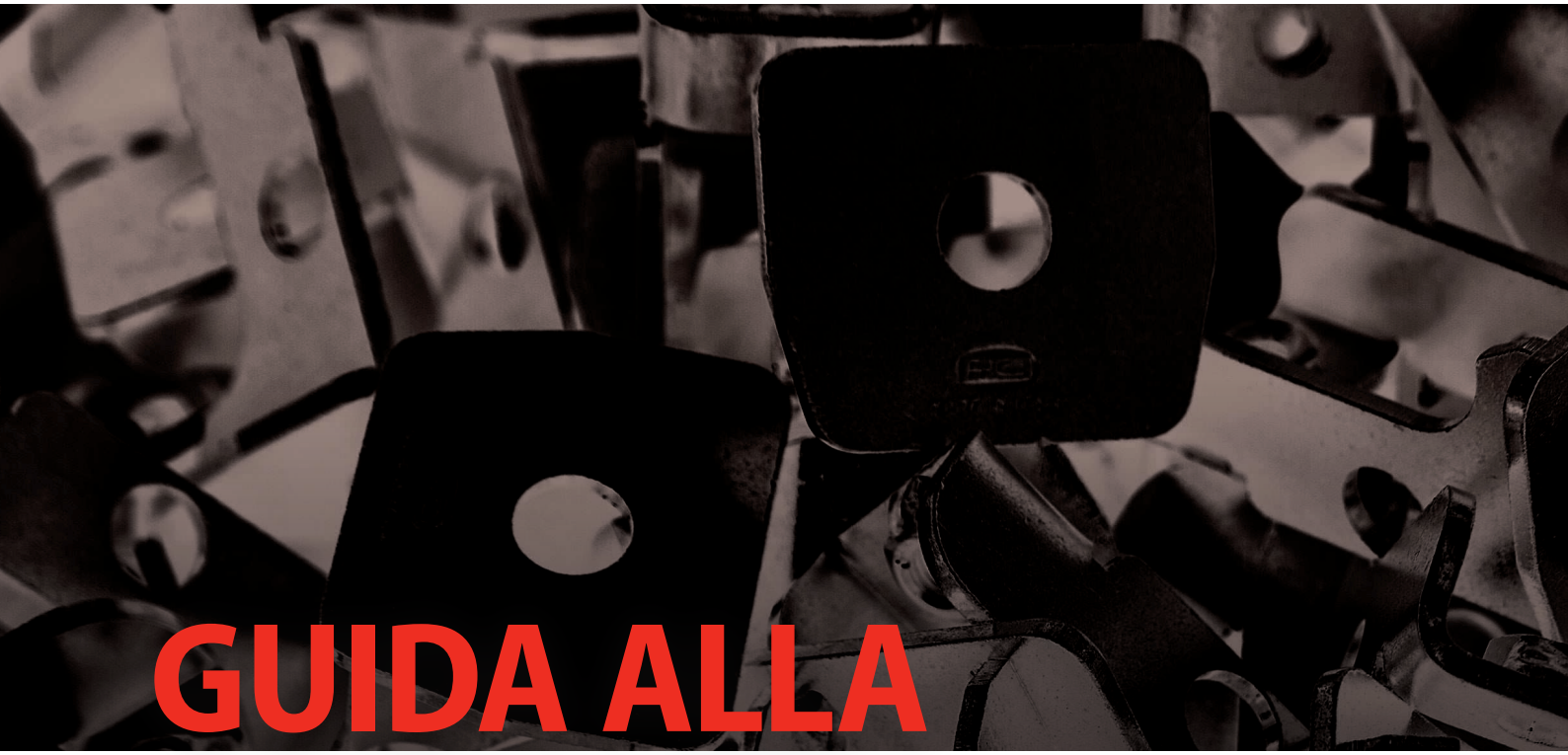

GUIDA ALLA CONSULTAZIONE

Il catalogo FAC 2014 presenta una nuova codifica dei prodotti, ideata seguendo una logica che va dal generale al particolare, partendo dalle più ampie famiglie di prodotti e scendendo in dettaglio verso il singolo oggetto, definito nelle sue caratteristiche (tipologia, misura, materiale).
La consultazione risulta così semplice ed intuitiva; i codici vengono riconosciuti per classe di prodotto, con una numerazione che acquista un significato chiaro per l'utilizzatore.

CONSULTATION GUIDE

The FAC 2014 catalog presents a new codification system of its products, designed according to a logic that goes from the general to the detail of the product, starting from the most extensive product family, down in detail to the single item, defined by each individual characteristic (type, size, material).
The consultation process is now simpler and more intuitive than ever before; the codes are recognized by class of product, with a codification system that will gain a clear meaning for the user.

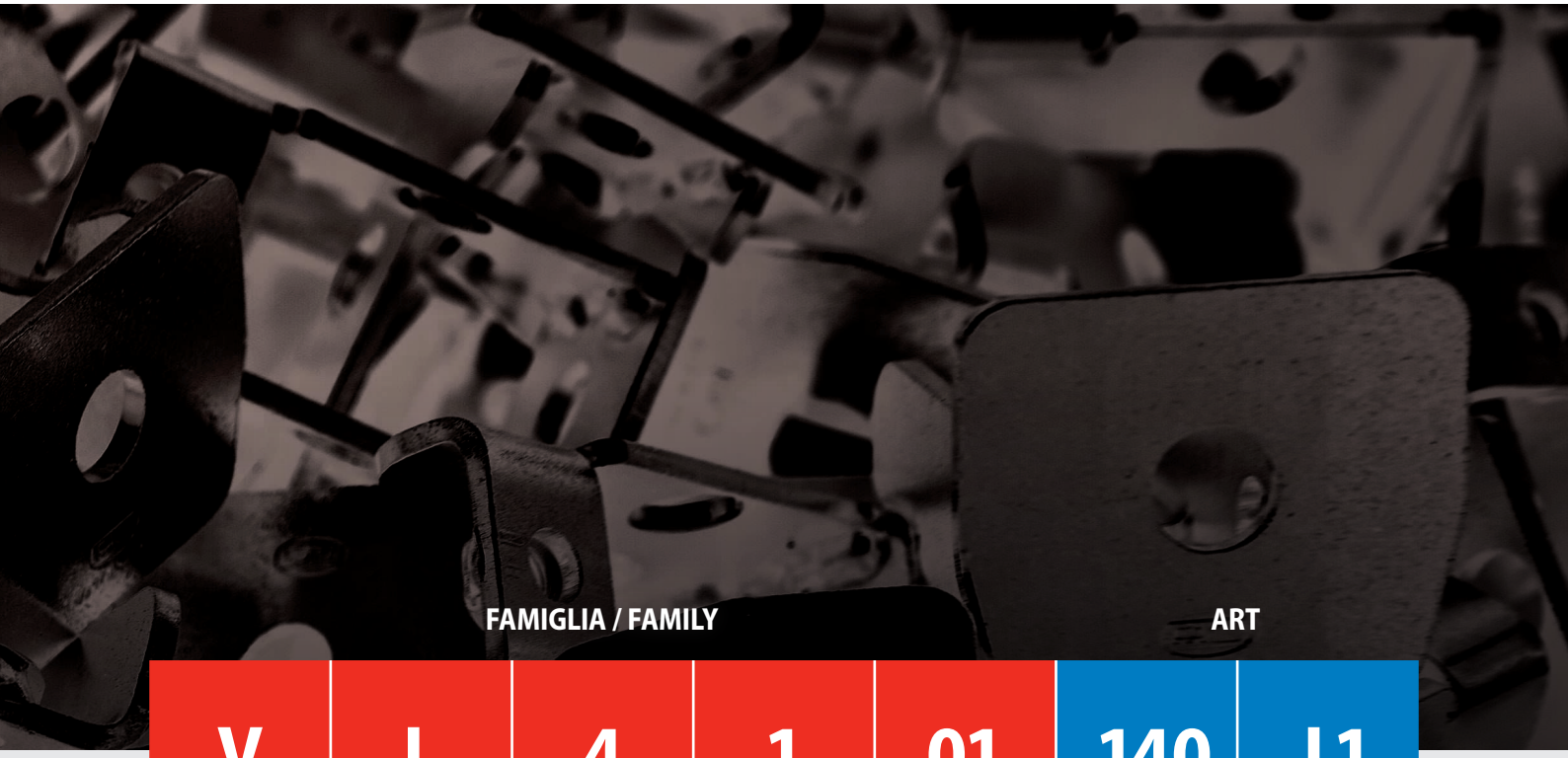

FAMIGLIA / FAMILY | ART

V	L	4	1	01	.140	.L1

V	Nella prima posizione una lettera identifica la tipologia generale: **V** Articolo di vendita **K** Kit **R** Articolo ricambio	In the first position a letter identifies the general product type: **V** Sales article **K** Kit **R** Spare parts
L	Una lettera indica la sezione: **A** Cancelli Scorrevoli **B** Cancelli Sospesi **C** Cancelli ad Anta **D** Cancelli Autoportanti **L** Accessori Vari	A letter will indicate a section: **A** Sliding Gate **B** Hanging Doors **C** Swing Gates **D** Cantilever Systems **L** Sundry Accessories
4	Un numero indica il tipo di articolo (ancoraggio, cardine, ecc.).	This figure is a number and will indicate the type of article (anchor, hinge etc.).
1	Una cifra indica la caratteristica principale e discriminante dell'articolo.	This figure is a number and will indicate the main feature discriminating the article.
01	Una o due cifre indicano un'altra caratteristica più dettagliata.	This figure may be one or two digits and will indicated a more specific and detailed feature.
.140	Scelto l'articolo, si definiscono dimensione e forma: codice formato da un punto, con un numero di tre cifre (.111) o una lettera e due cifre (.A18).	Chosen the article, this figure will defined the size and shape: code size by one dot, with a three-digit number (.111) or a dot a letter and two digits (.A18).
.L1	Dettaglio sul materiale o altre varianti: codice formato da un punto e una serie di caratteri, lettere e numeri (.I2). **A** Alluminio **C** Cromato **I** Acciaio inox **L** Lucido **N** Nylon **O** Ottone **V** Verniciato nero **Y** Zincato giallo	Detail on material or other variants: code formed by a dot and a series of characters, letters and numbers (.I2). **A** Aluminum **C** Chromed **I** Stainless steel **L** Black **N** Nylon **O** Brass **V** Black painted **Y** Zinc yellow

INDICE GENERALE
GENERAL INDEX

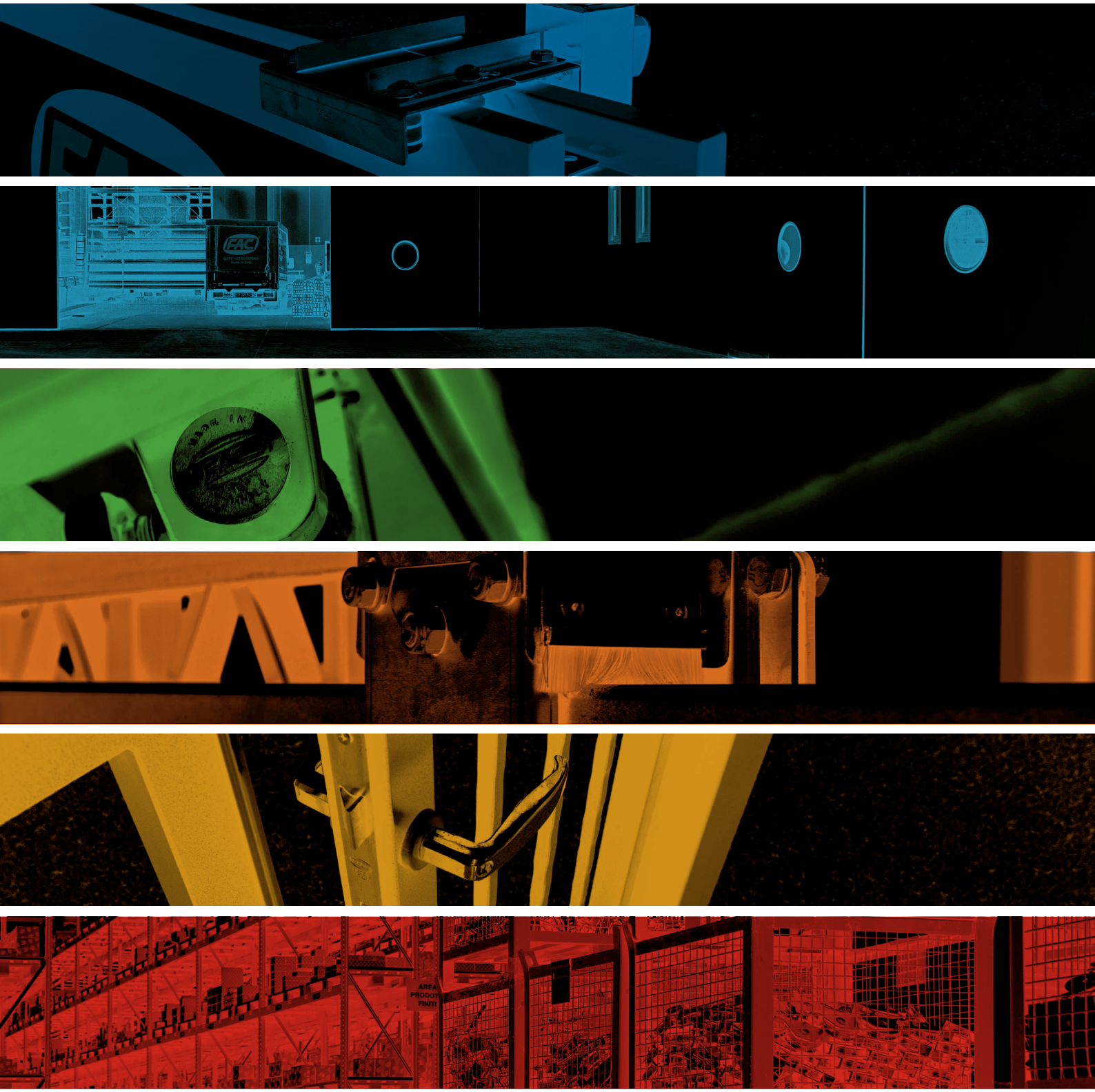

Kg portata
load

n° cuscinetti
bearings n°

pezzi per confezione
pieces per box

INDICE INDEX

INDICE INDEX

Cancelli autoportanti
Cantilever systems

Accessori vari
Sundry accessories

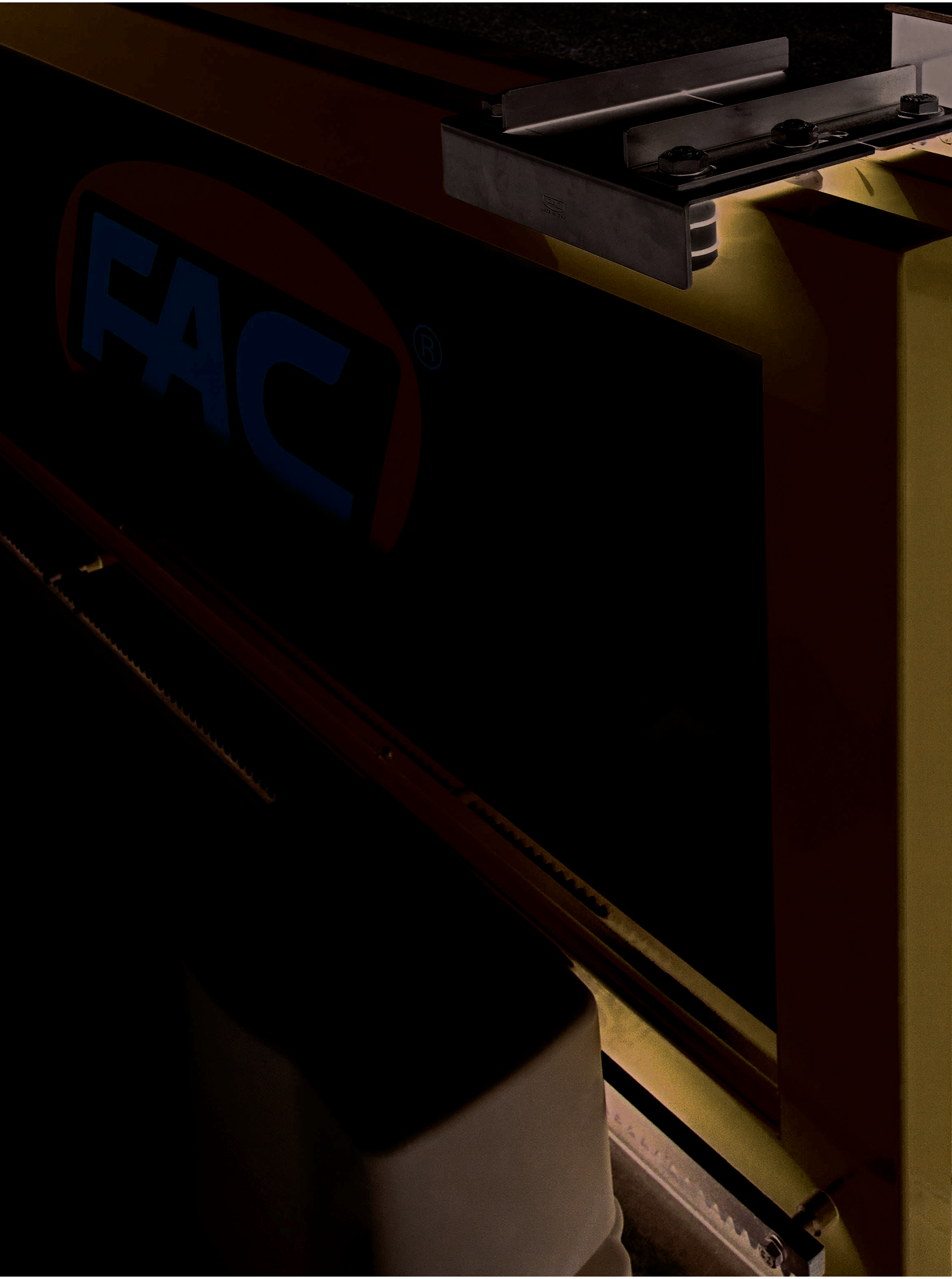

ACCESSORI PER CANCELLI SCORREVOLI

Accessories for sliding gates

Tutte le misure sono espresse in mm dove non diversamente specificato.
All measurements are in mm unless otherwise specified.

Esempi di applicazione
Examples of application

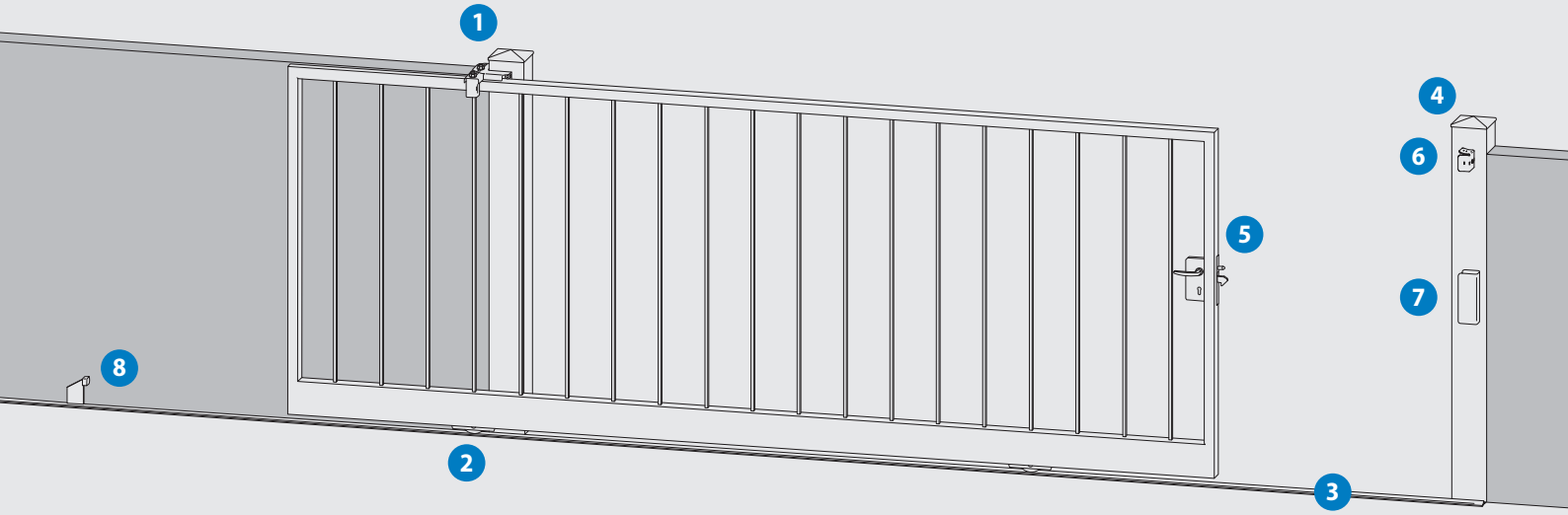

1. Piastre ed olive / Upper guide brackets and rollers

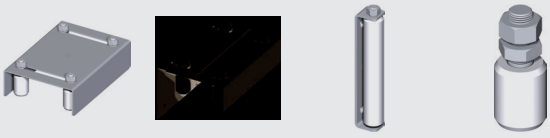

VA3205 VA3204 VA3107 VA3101

2. Ruote / Wheels

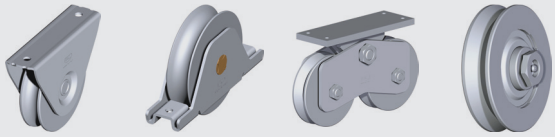

VA1307 VA1304 VA1106 VA1102

3. Rotaie e cremagliere / Rails and racks

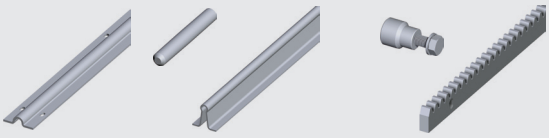

VA2302 VA2902+VA2404 VA6211+VA6200

4. Copricolonna / Caps

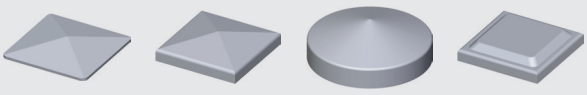

VL2100 VL2101 VL2103 VL2104

5. Maniglie e serrature a gancio / Handles and hook-locks

VL3101 VL3111 VB1301

6. Battente di sicurezza / Safety strike

VA4203

7. Battente per serratura a gancio / Strike box for hook-lock

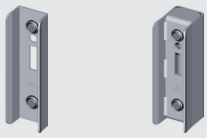

VA4201 VA4202

8. Battente d'arresto / Limit stop

VA4101

VA1101

Ruota gola V con cuscinetto a sfere
Wheel V groove with ball bearing

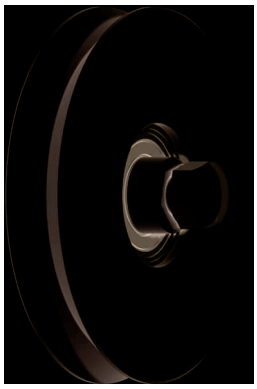

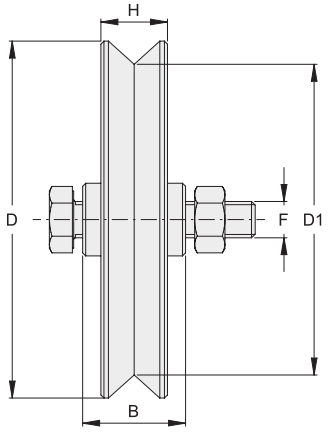

COD.	ART.	D	D1	B	H	F	Kg			FINITURA
VA1101.040	40/V	40	32	16	12	8	50	1	50	zinc./galv.
VA1101.050	50/V	50	43	16	12	8	60	1	30	zinc./galv.
VA1101.060	301	60	48	24	16	10	100	1	20	zinc./galv.
VA1101.075	303	75	65	24	18	12	150	1	10	zinc./galv.
VA1101.090	305	90	75	34	20	12	170	1	6	zinc./galv.
VA1101.090.2	305.2	90	69	34	30	14	300	2	6	zinc./galv.
VA1101.100	405	100	84	34	22	12	200	1	6	zinc./galv.
VA1101.100.2	405.2	100	79	34	30	14	400	2	4	zinc./galv.
VA1101.120	307	120	104	34	22	12	200	1	4	zinc./galv.
VA1101.120.2	407	120	99	34	30	14	400	2	2	zinc./galv.
VA1101.140	317	140	123	34	25	14	250	1	6	zinc./galv.
VA1101.140.2	409	140	119	44	30	14	400	2	4	zinc./galv.
VA1101.160	309	160	142	44	26	16	300	1	4	zinc./galv.
VA1101.160.2	313	160	139	44	32	16	600	2	4	zinc./galv.
VA1101.160.3	413	160	139	44	30	14	400	2	4	zinc./galv.
VA1101.200	311	200	182	44	26	16	300	1	2	zinc./galv.
VA1101.200.2	315	200	179	44	32	16	600	2	2	zinc./galv.
VA1101.200.3	415	200	179	44	30	14	400	2	2	zinc./galv.
VA1101.060.I	1301	60	48	24	16	10	100	1	10	inox
VA1101.075.I	1303	75	65	24	18	12	150	1	10	inox
VA1101.090.I	1305	90	75	34	20	12	170	1	6	inox
VA1101.100.I	1405	100	84	34	22	12	200	1	6	inox
VA1101.120.I	1307	120	104	34	22	12	220	1	4	inox
VA1101.120.I2	1407	120	99	34	30	14	400	2	2	inox
VA1101.140.I	1317	140	123	34	25	14	250	1	4	inox
VA1101.140.I2	1409	140	119	44	30	14	450	2	4	inox
VA1101.160.I	1309	160	142	44	26	16	400	1	4	inox
VA1101.160.I2	1413	160	139	44	30	14	500	2	4	inox
VA1101.040.N	40/VN	40	32	16	12	8	50	1	50	nylon
VA1101.050.N	50/VN	50	43	16	12	8	60	1	30	nylon
VA1101.060.N	301N	60	51	20	16	10	100	1	20	nylon

Valore diametro esterno nominale
External diameter nominal value

VA1102

Ruota gola V con cuscinetto a sfere e perno ingrassatore
Wheel V groove with ball bearing and pin with lubrication nipple

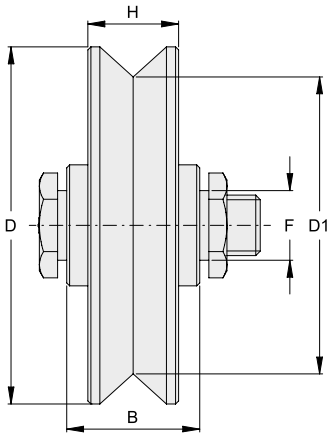

COD.	ART.	D	D1	B	H	F	Kg			FINITURA
VA1102.090	103	90	73	34	25	21	200	1	6	zinc./galv.
VA1102.120	105	120	99	44	30	23	400	1	2	zinc./galv.
VA1102.160	163	160	139	44	30	23	500	1	4	zinc./galv.
VA1102.200	165	200	179	44	30	23	600	1	2	zinc./galv.
VA1102.250	167	250	230	54	32	24	800	1	1	zinc./galv.
VA1102.250.2	169	250	222	74	50	24	1500	2	1	zinc./galv.
VA1102.300	171	300	280	54	32	24	800	1	1	zinc./galv.
VA1102.300.2	173	300	272	74	50	24	1500	2	1	zinc./galv.

Valore diametro esterno nominale
External diameter nominal value

VA1103

Ruota gola V a supporto interno
Wheel V groove with internal support bracket

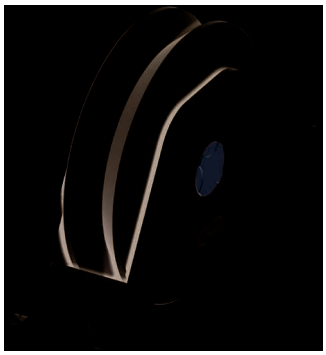

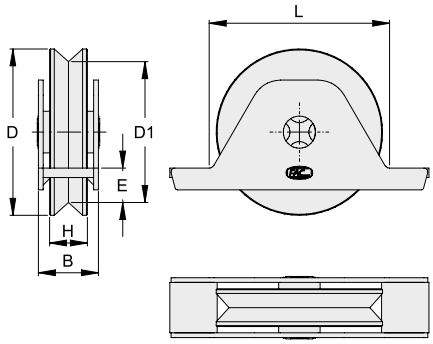

COD.	ART.	D	D1	B	H	E	L	Kg			FINITURA
VA1103.075	721.75	75	65	29	18	15	85	180	1	6	zinc./galv.
VA1103.090	107	90	75	33	20	17	97	200	1	6	zinc./galv.
VA1103.100	721.100	100	84	33	22	20	110	220	1	4	zinc./galv.
VA1103.120	207/R	120	104	33	22	23	130	250	1	2	zinc./galv.
VA1103.120.2	207	120	103	38	25	23	130	400	2	2	zinc./galv.
VA1103.140.2	721.140	140	123	38	25	27	152	420	2	4	zinc./galv.
VA1103.160.2	721.160	160	139	42	30	32	175	450	2	4	zinc./galv.
VA1103.200.2	721.200	200	179	50	32	42	216	700	2	2	zinc./galv.
VA1103.090.I	1107	90	75	32	20	17	97	200	1	6	inox
VA1103.120.I2	1207	120	103	38	25	23	130	400	2	2	inox

Valore diametro esterno nominale
External diameter nominal value

VA1104

Ruota gola V con supporto interno forato
Wheel V groove with drilled internal support bracket

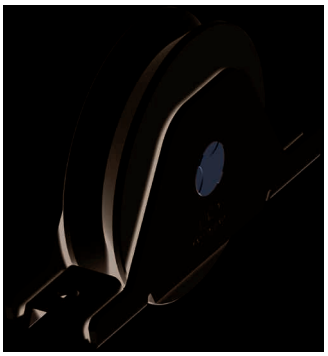

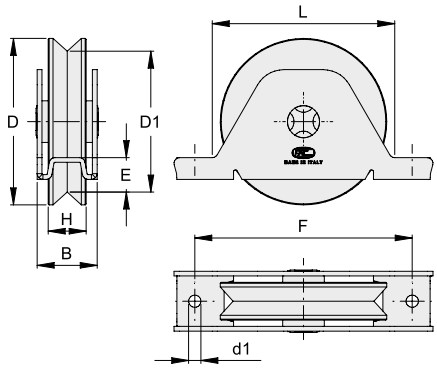

COD.	ART.	D	D1	B	H	E	L	F	d1	Kg			FINITURA
VA1104.090	731.90	90	75	33	20	18	97	115	6.5	200	1	6	zinc./galv.
VA1104.120.2	731.120	120	103	38	25	23	130	150	9	400	2	2	zinc./galv.

Valore diametro esterno nominale
External diameter nominal value

VA1105 NEW

Ruota gola V con supporto interno sovrapposto
Wheel V groove with overlapping internal support bracket

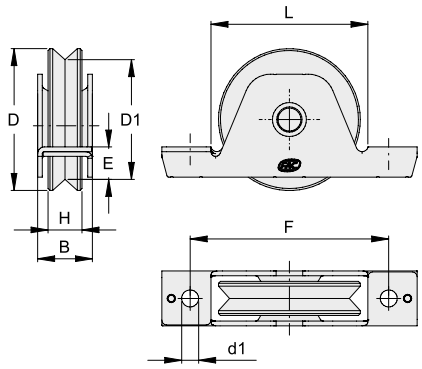

COD.	ART.	D	D1	B	H	E	L	F	d1	Kg			FINITURA
VA1105.075	726.75	75	65	29	18	17	83	105	9	180	1	6	zinc./galv.

Valore diametro esterno nominale
External diameter nominal value

VA1106

Ruota doppia gola V con bilanciere e piastra forata di fissaggio
Double wheel V groove with rocker arm and drilled fixing plate

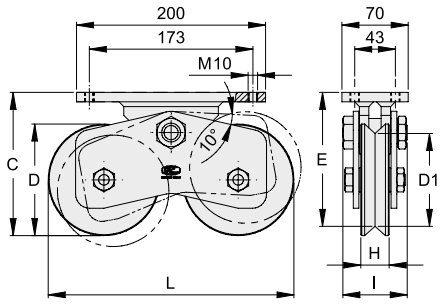

COD.	ART.	D	D1	C	E	H	I	L	Kg			FINITURA
VA1106.120.2	741.120	120	98	151	141	30	68	260	900	4	2	zinc./galv.
VA1106.160.2	741.160	160	138	195	185	32	78	370	1240	4	1	zinc./galv.
VA1106.200.2	741.200	200	178	236	226	30	78	454	1520	4	1	zinc./galv.

Valore diametro esterno nominale
External diameter nominal value

CANCELLI SCORREVOLI SLIDING GATES

VA1107

Ruota gola V con supporto esterno
Wheel V groove with external support bracket

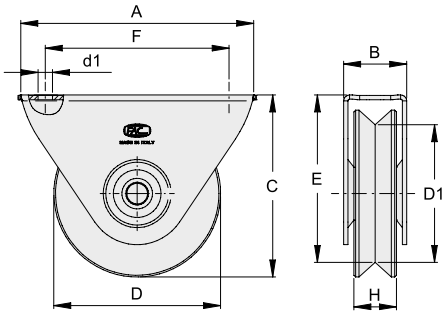

COD.	ART.	D	D1	A	B	C	E	d1	F	H	Kg			FINITURA
VA1107.060	101.60	60	46	80	26	66	59	6.5	62	17	100	1	10	zinc./galv.
VA1107.075	101	75	60	120	36	80	74	8.5	90	25	200	1	6	zinc./galv.
VA1107.100.2	127	100	83	140	38	107	100	8.5	108	25	400	2	6	zinc./galv.
VA1107.075.I	1101	75	60	120	36	80	74	8.5	90	25	200	1	6	inox

Valore diametro esterno nominale
External diameter nominal value

VA1108

Ruota gola V con piastre a saldare
Wheel V groove with plates to weld

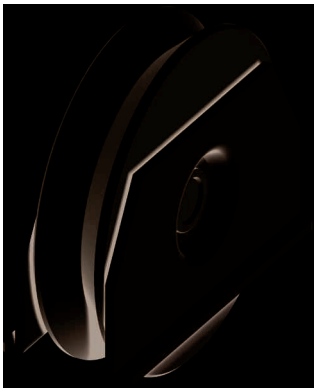

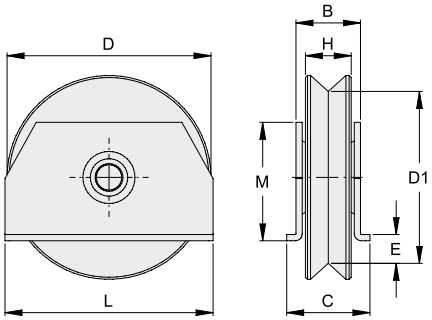

COD.	ART.	D	D1	B	C	E	H	L	M	Kg			FINITURA
VA1108.075	491.75	75	65	29.5	37	12	18	80	47	150	1	6	zinc./galv.
VA1108.090	491.90	90	75	31	40	10	20	100	57	200	1	6	zinc./galv.
VA1108.100	491.100	100	84	32.5	40	13.5	22	100	57	200	1	6	zinc./galv.
VA1108.100.2	496.100	100	79	44	52	13.5	30	100	57	300	2	4	zinc./galv.
VA1108.120	491.120	120	104	32.5	40	15	22	120	75	250	1	6	zinc./galv.
VA1108.120.2	496.120	120	99	44	52	15	30	120	75	400	2	6	zinc./galv.

Valore diametro esterno nominale
External diameter nominal value

VA1201

Ruota gola U con cuscinetto a sfere
Wheel U groove with ball bearing

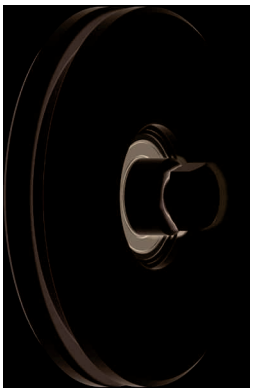

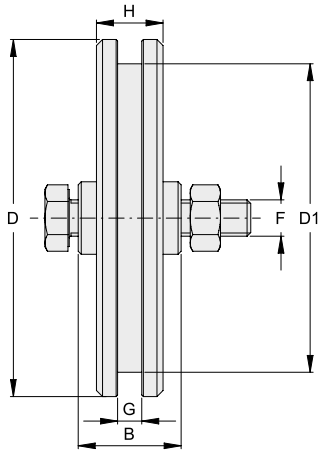

COD.	ART.	D	D1	B	G	H	F	Kg			FINITURA
VA1201.060	302	60	48	24	6	16	10	100	1	20	zinc./galv.
VA1201.075	304	75	61	24	7	18	12	150	1	10	zinc./galv.
VA1201.090	306	90	72	34	8	20	12	170	1	6	zinc./galv.
VA1201.090.2	306.2	90	72	34	21	30	14	300	2	6	zinc./galv.
VA1201.100	406	100	82	34	8	22	12	200	1	6	zinc./galv.
VA1201.100.2	406.2	100	82	34	21	30	14	400	2	4	zinc./galv.
VA1201.120	308	120	102	34	8	22	12	200	1	4	zinc./galv.
VA1201.120.2	408	120	102	34	21	30	14	400	2	2	zinc./galv.
VA1201.140	318	140	122	34	16	25	14	250	1	6	zinc./galv.
VA1201.140.2	410	140	120	44	21	30	14	400	2	4	zinc./galv.
VA1201.160	310	160	140	44	16	26	16	300	1	4	zinc./galv.
VA1201.160.3	414	160	140	44	21	30	14	400	2	4	zinc./galv.
VA1201.160.4	314	160	140	44	21	32	16	600	2	4	zinc./galv.
VA1201.200	312	200	180	44	16	26	16	300	1	2	zinc./galv.
VA1201.200.2	316	200	180	44	21	32	16	600	2	2	zinc./galv.
VA1201.200.3	416	200	180	44	21	30	14	400	2	2	zinc./galv.
VA1201.120.I2	1408	120	102	34	21	30	14	400	2	2	inox
VA1201.160.I3	1414	160	140	44	21	30	14	400	2	4	inox

Valore diametro esterno nominale
External diameter nominal value

VA1202

Ruota gola U con cuscinetto a sfere e perno ingrassatore
Wheel U groove with ball bearing and pin with lubrication nipple

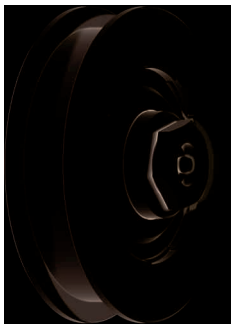

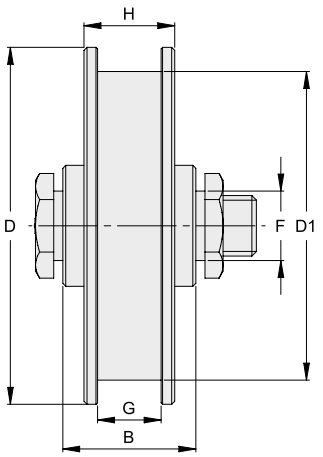

COD.	ART.	D	D1	B	G	H	F	Kg			FINITURA
VA1202.090	104	90	72	34	16	25	21	200	1	6	zinc./galv.
VA1202.120	106	120	100	44	21	30	23	400	1	2	zinc./galv.
VA1202.160	164	160	140	44	21	30	23	500	1	4	zinc./galv.
VA1202.200	166	200	180	44	21	30	23	600	1	2	zinc./galv.
VA1202.250	168	250	228	54	22	32	24	800	1	1	zinc./galv.
VA1202.250.2	170	250	228	74	32	50	24	1500	2	1	zinc./galv.
VA1202.300	172	300	278	54	22	32	24	800	1	1	zinc./galv.
VA1202.300.2	174	300	278	74	32	50	24	1500	2	1	zinc./galv.

Valore diametro esterno nominale
External diameter nominal value

VA1203

Ruota gola U con supporto interno
Wheel U groove with internal support bracket

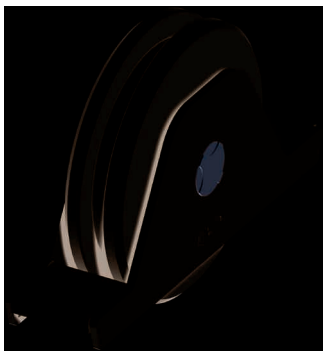

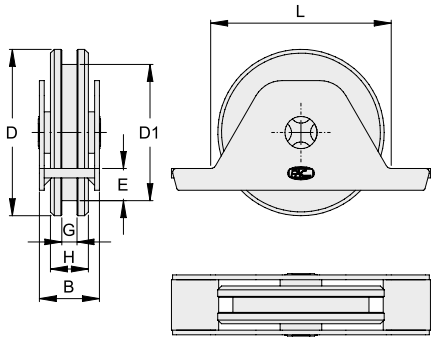

COD.	ART.	D	D1	B	H	G	E	L	Kg			FINITURA
VA1203.075	722.75	75	61	29	18	8	15	85	180	1	6	zinc./galv.
VA1203.090	109	90	72	33	20	8	17	97	200	1	6	zinc./galv.
VA1203.100	722.100	100	82	33	22	8	20	110	220	1	4	zinc./galv.
VA1203.120.2	209	120	102	38	25	16	23	130	400	2	2	zinc./galv.
VA1203.140.2	722.140	140	122	38	25	16	27	152	420	2	4	zinc./galv.
VA1203.160.2	722.160	160	140	42	30	21	32	175	450	2	4	zinc./galv.
VA1203.200.2	722.200	200	180.5	50	32	21	42	216	700	2	2	zinc./galv.

Valore diametro esterno nominale
External diameter nominal value

VA1204

Ruota gola U con supporto interno forato
Wheel U groove with drilled internal support bracket

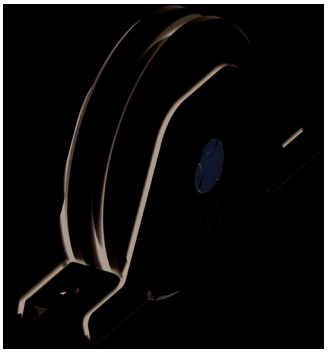

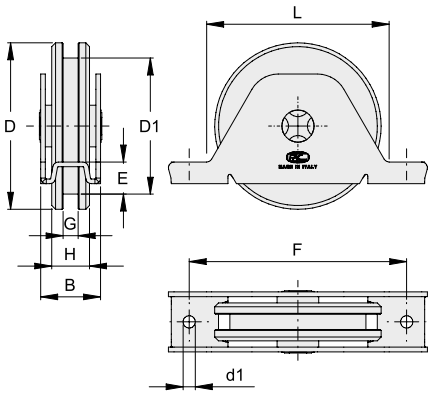

COD.	ART.	D	D1	B	H	G	E	L	F	d1	Kg			FINITURA
VA1204.090	732.90	90	72	33	20	8	17	97	115	6.5	200	1	6	zinc./galv.
VA1204.120.2	732.120	120	102	38	25	16	22.5	130	150	9	400	2	2	zinc./galv.

Valore diametro esterno nominale
External diameter nominal value

VA1205 NEW

Ruota gola U con supporto interno sovrapposto
Wheel U groove with overlapping internal support bracket

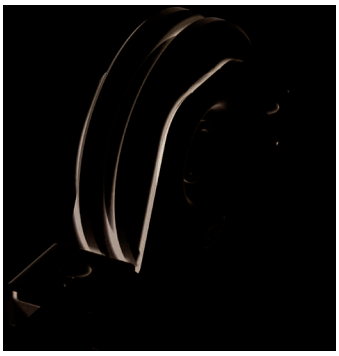

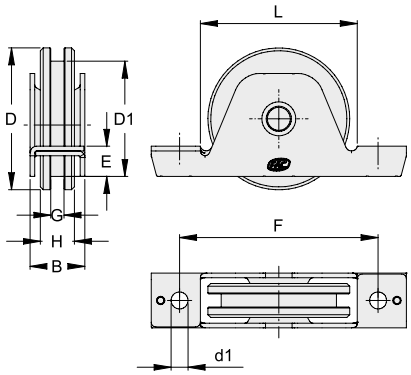

COD.	ART.	D	D1	B	H	G	E	L	F	d1	Kg			FINITURA
VA1205.075	727.75	75	61	29	18	7	17	83	105	9	180	1	6	zinc./galv.

Valore diametro esterno nominale
External diameter nominal value

VA1206

Ruota doppia gola U con bilanciere e piastra forata di fissaggio
Double wheel U groove with rocker arm and drilled fixing plate

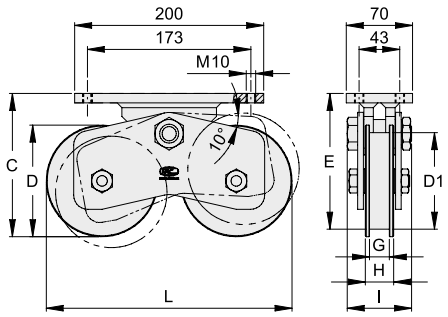

COD.	ART.	D	D1	C	E	H	I	L	G	Kg			FINITURA
VA1206.120.2	742.120	120	102	151	143	30	68	260	21	900	4	2	zinc./galv.
VA1206.160.2	742.160	160	142	195	187	32	78	370	21	1240	4	1	zinc./galv.
VA1206.200.2	742.200	200	182	236	228	30	78	454	21	1520	4	1	zinc./galv.

Valore diametro esterno nominale
External diameter nominal value

VA1207

Ruota gola U con supporto esterno
Wheel U groove with external support bracket

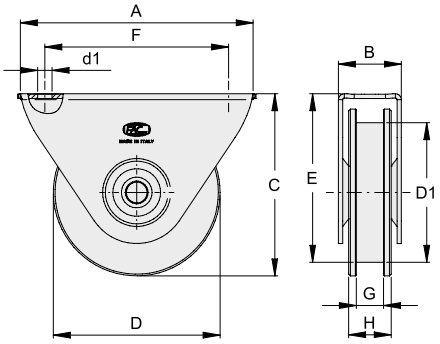

COD.	ART.	D	D1	A	B	C	E	d1	F	G	H	Kg			FINITURA
VA1207.060	102.60	60	48	80	26	66	60	6.5	62	6	17	100	1	10	zinc./galv.
VA1207.075	102	75	59	120	36	80	74	8.5	90	8	25	200	1	6	zinc./galv.
VA1207.075.3	402	75	59	120	36	80	74	8.5	90	16	25	200	1	6	zinc./galv.
VA1207.100.2	128	100	82	140	38	107	100	8.5	108	16	25	400	2	6	zinc./galv.

Valore diametro esterno nominale
External diameter nominal value

VA1208

Ruota gola U con piastre a saldare
Wheel U groove with plates to weld

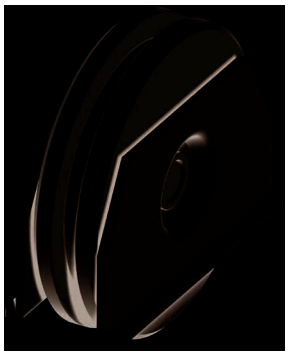

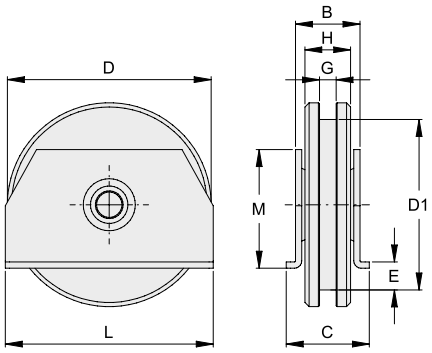

COD.	ART.	D	D1	B	C	E	H	G	L	M	Kg			FINITURA
VA1208.075	492.75	75	61	29.5	37	12	18	7	80	47	150	1	6	zinc./galv.
VA1208.100	492.100	100	82	32.5	40	13.5	22	8	100	57	200	1	6	zinc./galv.
VA1208.100.2	497.100	100	82	44	52	13.5	30	21	100	57	300	2	4	zinc./galv.
VA1208.120	492.120	120	102	32.5	40	15	22	8	120	75	250	1	6	zinc./galv.
VA1208.120.2	497.120	120	102	44	52	15	30	21	120	75	400	2	6	zinc./galv.

Valore diametro esterno nominale
External diameter nominal value

VA1301

Ruota gola tonda con cuscinetto a sfere
Wheel half-round groove with ball bearing

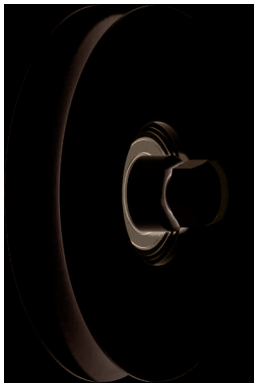

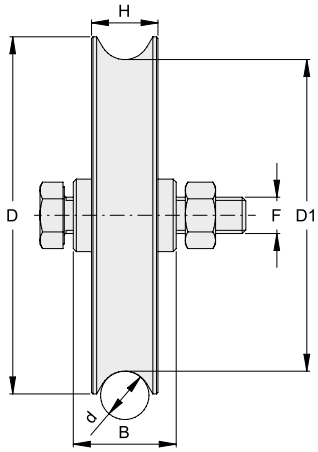

COD.	ART.	D	D1	d	B	H	F	Kg			FINITURA
VA1301.060	301/16	60	46	16	24	21	10	100	1	20	zinc./galv.
VA1301.075	303/16	75	60	16	24	21	12	150	1	10	zinc./galv.
VA1301.090	305/16	90	73.5	16	34	21	12	170	1	6	zinc./galv.
VA1301.090.2	305/16.2	90	75	16	34	30	14	300	2	6	zinc./galv.
VA1301.090.3	453	90	73.5	16	34	25	12	200	1	6	zinc./galv.
VA1301.100	405/16	100	84.5	16	34	22	12	200	1	6	zinc./galv.
VA1301.100.2	405/16.2	100	84.5	16	34	30	14	400	2	4	zinc./galv.
VA1301.120	307/16	120	103.5	16	34	22	12	220	1	4	zinc./galv.
VA1301.120.3	454	120	103	16	34	25	14	250	1	4	zinc./galv.
VA1301.140	317/16	140	123	16	34	25	14	350	1	6	zinc./galv.
VA1301.160	456	160	141	16	44	26	16	400	1	4	zinc./galv.
VA1301.090.I	1305/16	90	73.5	16	34	21	12	200	1	6	inox
VA1301.100.I	1405/16	100	84.5	16	34	22	12	200	1	6	inox
VA1301.120.I3	1454	120	103	16	34	25	14	250	1	2	inox
VA1301.160.I	1456	160	141	16	44	26	16	400	1	4	inox
VA1301.060.N	60/6N	60	48	6	20	16	10	100	1	20	nylon

Valore diametro esterno nominale
External diameter nominal value

VA1302

Ruota gola tonda con cuscinetto a sfere e perno con ingrassatore
Wheel half-round groove with ball bearing and pin with lubrication nipple

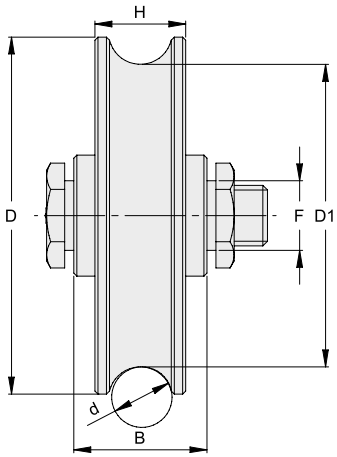

COD.	ART.	D	D1	B	H	d	F	Kg			FINITURA
VA1302.090	103/16	90	73.5	34	25	16	21	200	1	6	zinc./galv.

Valore diametro esterno nominale
External diameter nominal value

VA1303

Ruota gola tonda con supporto interno
Wheel half-round groove with internal support bracket

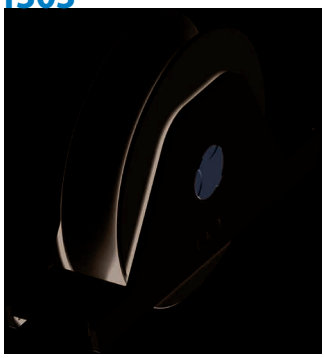

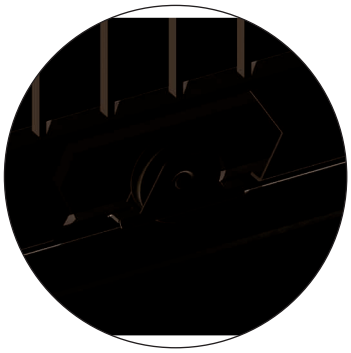

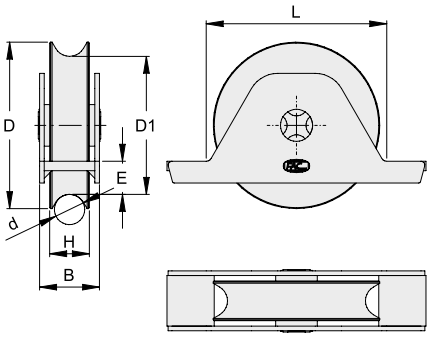

COD.	ART.	D	D1	d	B	H	E	L	Kg			FINITURA
VA1303.075	723.75	75	60	16	29	21	15	85	200	1	6	zinc./galv.
VA1303.090	107/16	90	73.5	16	33	21	17	97	200	1	6	zinc./galv.
VA1303.100	723.100	100	84.5	16	33	22	20	110	220	1	4	zinc./galv.
VA1303.120	207/16R	120	103.5	16	33	22	23	130	250	1	2	zinc./galv.
VA1303.120.2	207/16	120	103	16	38	25	23	130	400	2	2	zinc./galv.
VA1303.090.I	1107/16	90	73.5	16	32	21	17	97	200	1	6	inox
VA1303.120.I2	1207/16	120	103	16	38	25	23	130	400	2	2	inox

Valore diametro esterno nominale
External diameter nominal value

VA1304

Ruota gola tonda con supporto interno forato
Wheel half-round groove with drilled internal support bracket

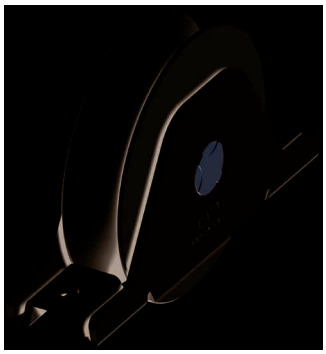

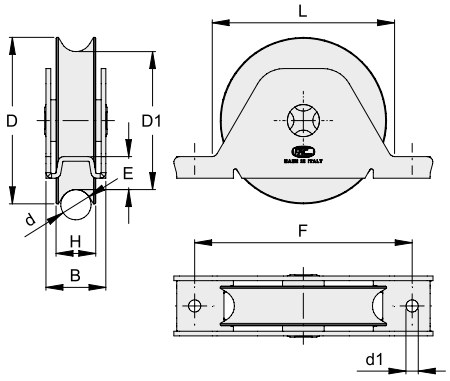

COD.	ART.	D	D1	d	B	H	E	L	F	d1	Kg			FINITURA
VA1304.090	733.90/16	90	73	16	33	20	17	97	115	6.5	200	1	6	zinc./galv.
VA1304.120.2	733.120/16	120	103	16	38	25	23	130	150	9	400	2	2	zinc./galv.

Valore diametro esterno nominale
External diameter nominal value

VA1305 NEW

Ruota gola tonda con supporto interno sovrapposto
Wheel half-round groove with overlapping internal support bracket

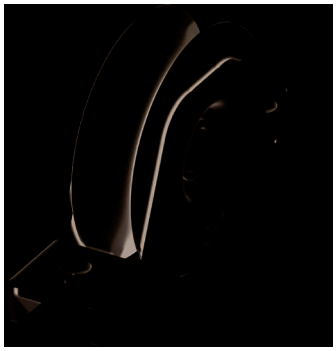

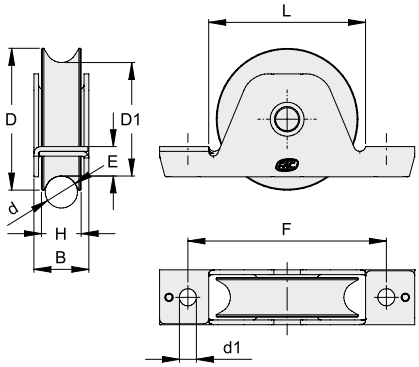

COD.	ART.	D	D1	d	B	H	E	L	F	d1	Kg			FINITURA
VA1305.075	728.75	75	60	16	29	21	15	83	105	9	180	1	6	zinc./galv.

Valore diametro esterno nominale
External diameter nominal value

VA1307

Ruota gola tonda con supporto esterno
Wheel half-round groove with external support bracket

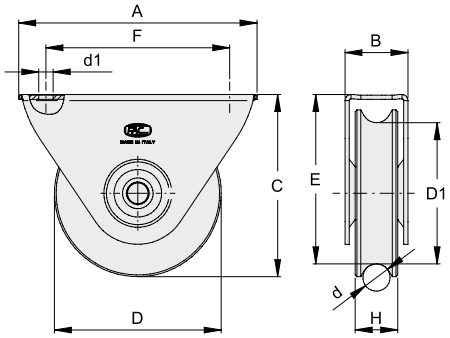

COD.	ART.	D	D1	d	A	B	C	E	d1	F	H	Kg			FINITURA
VA1307.060	101/16	75	60	16	120	36	80	74	8.5	90	25	200	1	6	zinc./galv.
VA1307.100.2	127/16	100	82	16	140	38	107	100	8.5	108	25	400	2	6	zinc./galv.
VA1307.060.I	1101/16	75	60	16	120	36	80	74	8.5	90	25	200	1	6	inox

Valore diametro esterno nominale
External diameter nominal value

VA1308

Ruota gola tonda con piastre a saldare
Wheel half-round groove with plates to weld

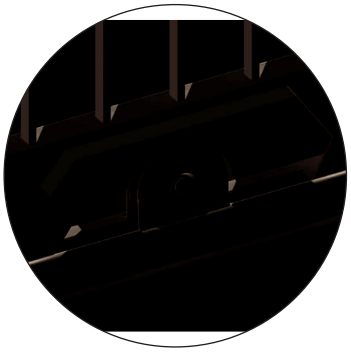

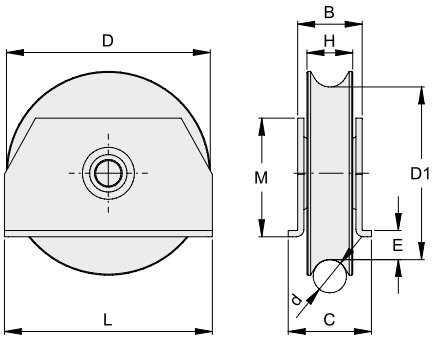

COD.	ART.	D	D1	d	B	C	E	H	L	M	Kg			FINITURA
VA1308.075	493.75	75	60	16	29.5	37	12	21	80	47	150	1	6	zinc./galv.
VA1308.100	493.100	100	84.5	16	32.5	40	13.5	22	100	57	200	1	6	zinc./galv.
VA1308.100.2	498.100.16	100	84.5	16	44	52	13.5	30	100	57	300	2	4	zinc./galv.
VA1308.120	493.120	120	103.5	16	32.5	40	15	22	120	75	250	1	6	zinc./galv.

Valore diametro esterno nominale
External diameter nominal value

VA1310

Puleggia per basculanti con fune da 6 mm
Pulley for up-and-over doors for wire diameter 6 mm

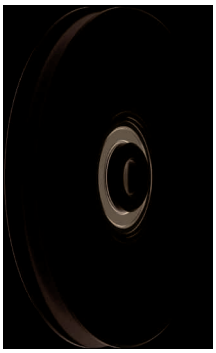

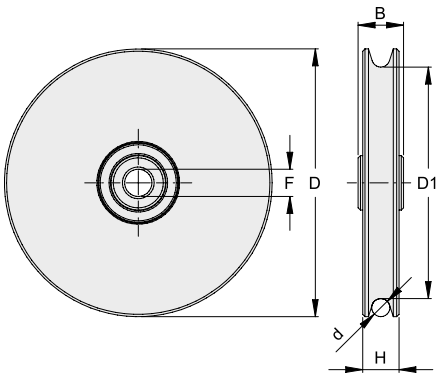

COD.	ART.	D	D1	d	B	H	F	Kg			FINITURA
VA1310.060	B60/6	60	48	6	20	16	10	100	1	20	zinc./galv.
VA1310.075	B75/6	75	61.5	6	20	16	12	150	1	10	zinc./galv.
VA1310.090	B90/6	90	75	6	20	16	12	170	1	6	zinc./galv.
VA1310.100	B100/6	100	86	6	20	16	12	200	1	6	zinc./galv.
VA1310.120	B120/6	120	106	6	20	16	12	220	1	12	zinc./galv.

Valore diametro esterno nominale
External diameter nominal value

VA1401

Ruota gola tonda con cuscinetto a sfere
Wheel half-round groove with ball bearing

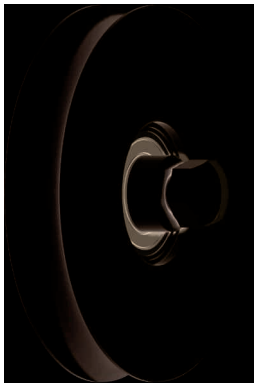

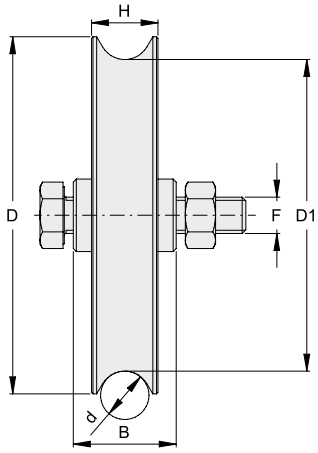

COD.	ART.	D	D1	d	B	H	F	Kg			FINITURA
VA1401.040	40/T	40	31.5	8	16	12	8	50	1	50	zinc./galv.
VA1401.050	50/T	50	41	8	16	12	8	60	1	30	zinc./galv.
VA1401.090	305/20	90	72	20	34	24	12	170	1	6	zinc./galv.
VA1401.090.2	305/20.2	90	68	20	34	30	14	300	2	6	zinc./galv.
VA1401.100	405/20	100	82	20	34	24	12	200	1	6	zinc./galv.
VA1401.100.2	405/20.2	100	80	20	34	30	14	400	2	4	zinc./galv.
VA1401.120.2	455	120	100	20	34	30	14	400	2	2	zinc./galv.
VA1401.140.2	409/20	140	120	20	44	30	14	500	2	4	zinc./galv.
VA1401.160.2	413/20	160	140	20	44	30	14	400	2	4	zinc./galv.
VA1401.160.3	457	160	140	20	44	32	16	600	2	4	zinc./galv.
VA1401.200.2	458	200	178.5	20	44	32	16	700	2	2	zinc./galv.
NEW **VA1401.090.I**	1305/20	90	72	20	34	24	12	170	1	6	inox
VA1401.120.I2	1455	120	100	20	34	30	14	400	2	2	inox
VA1401.140.I2	1409/20	140	120	20	44	30	14	450	2	4	inox
VA1401.160.I2	1413/20	160	140	20	44	30	14	500	2	4	inox
VA1401.040.N	40/TN	40	31.5	8	16	12	8	50	1	50	nylon
VA1401.050.N	50/TN	50	41	8	16	12	8	60	1	30	nylon
VA1401.060.N	60/8N	60	45	8	20	16	10	100	1	20	nylon

Valore diametro esterno nominale
External diameter nominal value

VA1402

Ruota gola tonda con cuscinetto a sfere e perno con ingrassatore
Wheel half-round groove with ball bearing and pin with lubrication nipple

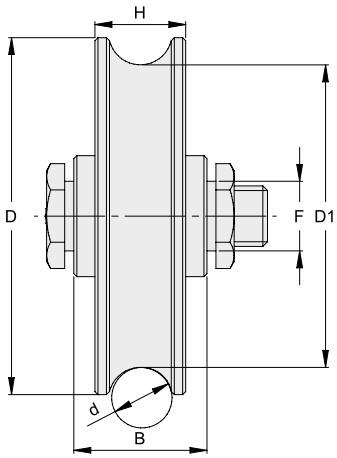

COD.	ART.	D	D1	B	H	d	F	Kg			FINITURA
VA1402.090	103/20	90	70	34	25	20	21	200	1	6	zinc./galv.
VA1402.120	105/20	120	99	44	30	20	23	400	1	2	zinc./galv.
VA1402.160	163/20	160	140	44	30	20	23	500	1	4	zinc./galv.
VA1402.200	165/20	200	179	44	30	20	23	600	1	2	zinc./galv.
VA1402.250	167/20	250	230	54	32	20	24	800	1	1	zinc./galv.
VA1402.250.2	169/20	250	229	74	50	20	24	1500	2	1	zinc./galv.
VA1402.300	171/20	300	280	54	32	20	24	800	1	1	zinc./galv.
VA1402.300.2	173/20	300	279	74	50	20	24	1500	2	1	zinc./galv.

Valore diametro esterno nominale
External diameter nominal value

VA1403

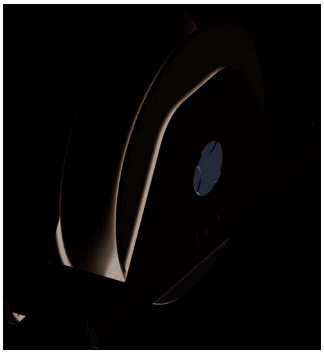

Ruota gola tonda con supporto interno
Wheel half-round groove with internal support bracket

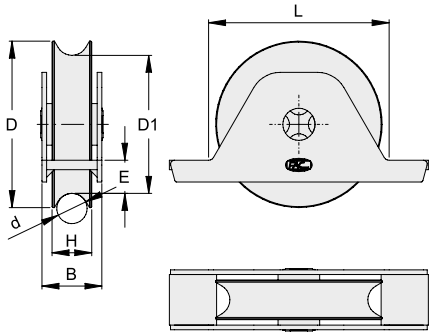

COD.	ART.	D	D1	d	B	H	E	L	Kg			FINITURA
VA1403.090	107/20	90	72	20	33	24	17	97	200	1	6	zinc./galv.
VA1403.100	723.100/20	100	82	20	33	24	20	110	250	1	4	zinc./galv.
VA1403.120.2	207/20	120	101	20	38	25	23	130	400	2	2	zinc./galv.
VA1403.140.2	723.140	140	121	20	38	25	27	152	420	2	4	zinc./galv.
VA1403.160.2	723.160	160	140	20	42	30	32	175	450	2	4	zinc./galv.
VA1403.200.2	723.200	200	178.5	20	50	32	42	216	700	2	2	zinc./galv.
NEW VA1403.090.I	1107/20	90	72	20	33	24	17	97	200	1	6	inox
VA1403.120.I2	1207/20	120	101	20	38	25	23	130	400	2	2	inox

Valore diametro esterno nominale
External diameter nominal value

VA1404

Ruota gola tonda con supporto interno forato
Wheel half-round groove with drilled internal support bracket

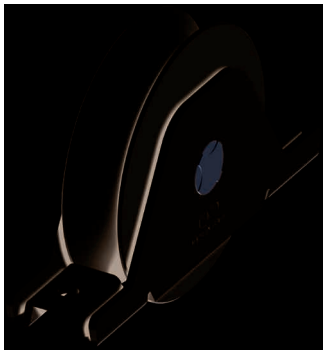

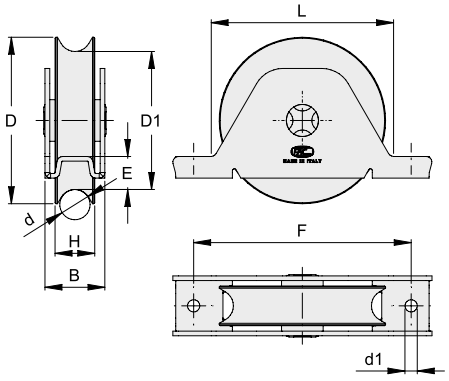

COD.	ART.	D	D1	d	B	H	E	L	F	d1	Kg			FINITURA
VA1404.090	733.90/20	90	72	20	33	20	17	97	115	6.5	200	1	6	zinc./galv.
VA1404.120.2	733.120/20	120	101	20	38	25	22	130	150	9	400	2	2	zinc./galv.

Valore diametro esterno nominale
External diameter nominal value

VA1406

Ruota doppia gola tonda con bilanciere e piastra forata di fissaggio
Double wheel half-round groove with rocker arm and drilled fixing plate

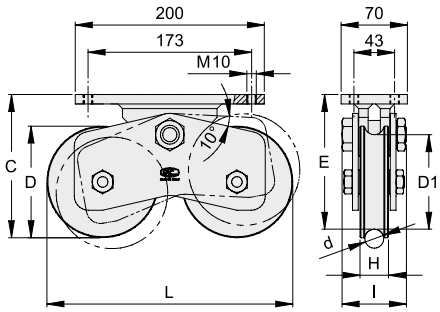

COD.	ART.	D	D1	C	E	H	I	L	d	Kg			FINITURA
VA1406.120.2	743.120	120	100	151	142	30	68	260	20	900	4	2	zinc./galv.
VA1406.160.2	743.160	160	140	195	186	32	78	370	20	1240	4	1	zinc./galv.
VA1406.200.2	743.200	200	180	236	227	30	78	454	20	1520	4	1	zinc./galv.

Valore diametro esterno nominale
External diameter nominal value

VA1407

Ruota gola tonda con supporto esterno
Wheel half-round groove with external support bracket

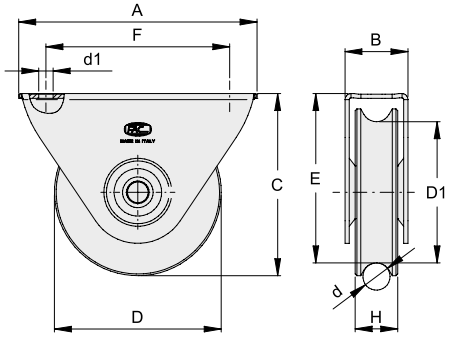

COD.	ART.	D	D1	d	A	B	C	E	d1	F	H	Kg			FINITURA
VA1407.060	101.60/12	60	50	12	80	26	66	61	6.5	62	17	100	1	10	zinc./galv.
VA1407.075	101/20	75	57	20	120	36	80	74	8.5	90	25	200	1	6	zinc./galv.
VA1407.100.2	127/20	100	80.5	20	140	38	107	100	8.5	108	25	400	2	6	zinc./galv.
NEW VA1407.075.I	1101/20	75	57	20	120	36	80	74	8.5	90	25	200	1	6	inox

Valore diametro esterno nominale
External diameter nominal value

VA1408

Ruota gola tonda con piastre a saldare
Wheel half-round groove with plates to weld

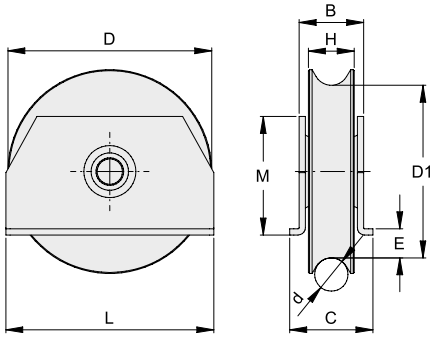

COD.	ART.	D	D1	d	B	C	E	H	L	M	Kg			FINITURA
VA1408.100	493.100.20	100	82	20	32.5	40	13.5	24	100	57	200	1	4	zinc./galv.
VA1408.100.2	498.100.20	100	80	20	44	52	13.5	30	100	57	300	2	4	zinc./galv.
VA1408.120.2	498.120	120	100	20	44	52	15	30	120	75	400	2	6	zinc./galv.

Valore diametro esterno nominale
External diameter nominal value

VA1410

Puleggia per basculanti con fune da 8 mm
Pulley for up-and-over doors for wire diameter 8 mm

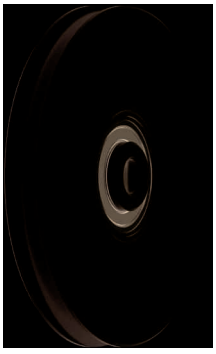

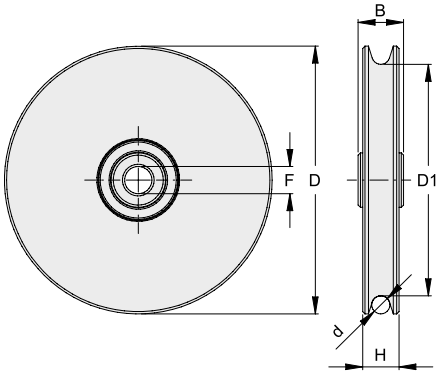

COD.	ART.	D	D1	d	B	H	F	Kg			FINITURA
VA1410.060	B60/8	60	45	8	20	16	10	100	1	20	zinc./galv.
VA1410.075	B75/8	75	52	8	20	16	12	150	1	10	zinc./galv.
VA1410.090	B90/8	90	72	8	20	16	12	170	1	6	zinc./galv.
VA1410.100	B100/8	100	82	8	20	16	12	200	1	6	zinc./galv.
VA1410.120	B120/8	120	102	8	20	16	12	220	1	12	zinc./galv.

Valore diametro esterno nominale
External diameter nominal value

VA2101

Rotaia per ruote gola V a pavimento
Ground guide rail for wheel V groove

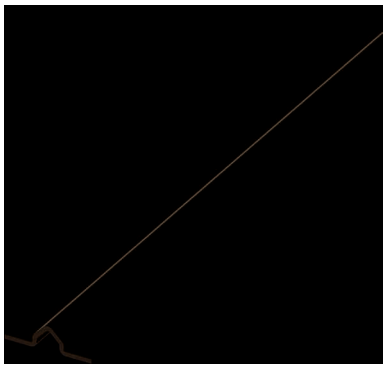

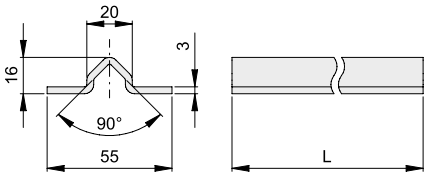

COD.	ART.	L(m)		FINITURA
VA2101.003	701/Z3	3	1	zinc./galv.
VA2101.006	701/Z	6	1	zinc./galv.

VA2102

Rotaia per ruote gola V a pavimento forata
Slotted ground guide rail for wheel V groove

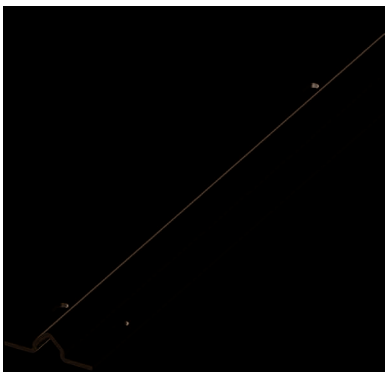

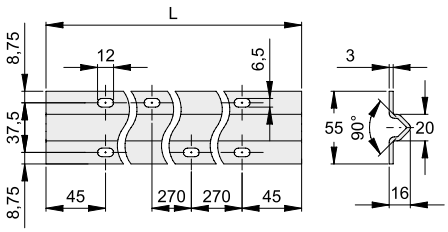

COD.	ART.	L(m)		FINITURA
VA2102.003	701/Z3F	3	1	zinc./galv.
VA2102.006	701/ZF	6	1	zinc./galv.

VA2301

Rotaia gola tonda 16 mm a pavimento
Ground guide rail half-round 16 mm profile

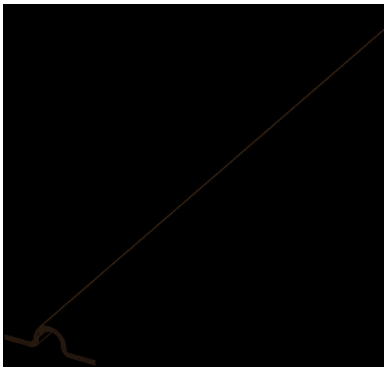

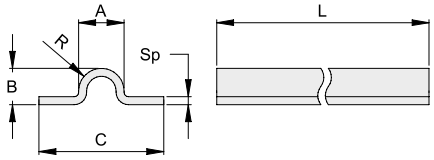

COD.	ART.	A	B	C	R	Sp	L(m)		FINITURA
VA2301.003	716/Z3	16	16	50	8	3	3	1	zinc./galv.
VA2301.006	716/Z	16	16	50	8	3	6	1	zinc./galv.
VA2301.003.I	1716/3	16	16	50	8	2.5	3	1	inox
VA2301.006.I	1716	16	16	50	8	2.5	6	1	inox

VA2302

Rotaia gola tonda 16 mm a pavimento forata
Slotted ground guide rail half-round 16 mm profile

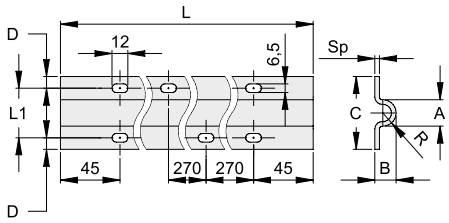

COD.	ART.	A	B	C	D	L1	R	Sp	L(m)		FINITURA
VA2302.003	716/Z3F	16	16	50	8.5	33	8	3	3	1	zinc./galv.
VA2302.006	716/ZF	16	16	50	8.5	33	8	3	6	1	zinc./galv.
VA2302.003.I	1716/3F	16	16	50	8.5	33	8	2.5	3	1	inox
VA2302.006.I	1716F	16	16	50	8.5	33	8	2.5	6	1	inox

VA2303

Rotaia gola tonda 16mm a cementare tipo 1
Guide rail half-round 16mm profile cement fixing type 1

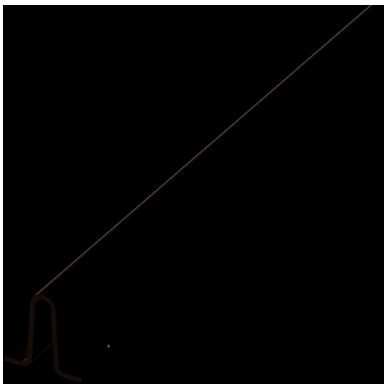

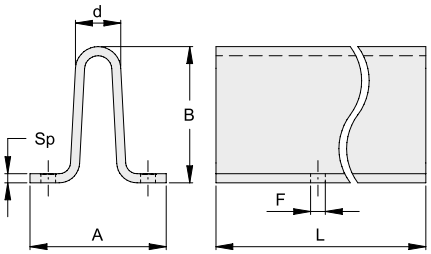

COD.	ART.	A	B	d	F	Sp	L(m)		FINITURA
VA2303.003	616/Z3	50	50	16	6.5	3	3	1	zinc./galv.
VA2303.006	616/Z	50	50	16	6.5	3	6	1	zinc./galv.

VA2304

Rotaia gola tonda 16 mm a cementare tipo 2
Guide rail half-round 16 mm profile cement fixing type 2

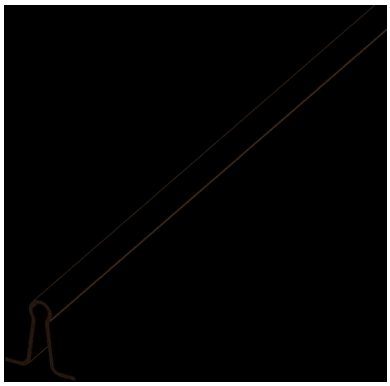

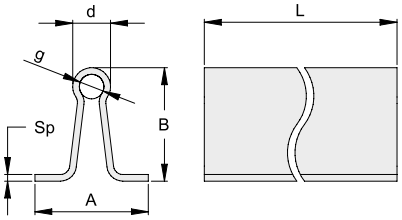

COD.	ART.	A	B	d	g	sp	L(m)		FINITURA
VA2304.003	816/Z3	50	50	16	11	2.5	3	1	zinc./galv.
VA2304.006	816/Z	50	50	16	11	2.5	6	1	zinc./galv.

VA2401

Rotaia gola tonda 20 mm a pavimento
Ground guide rail half-round 20 mm profile

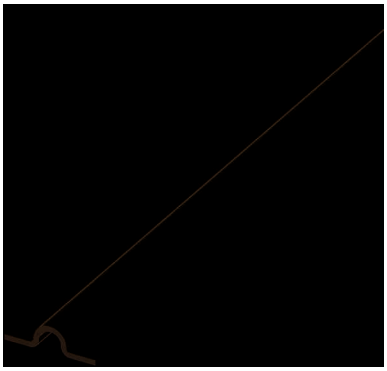

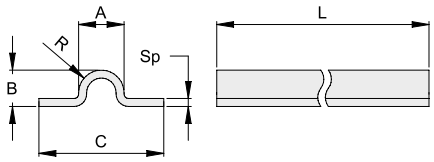

COD.	ART.	A	B	C	R	Sp	L(m)		FINITURA
VA2401.003	720/Z3	20	16	55	10	3.5	3	1	zinc./galv.
VA2401.006	720/Z	20	16	55	10	3.5	6	1	zinc./galv.
VA2401.003.I	1720/3	20	16	55	10	2.5	3	1	inox
VA2401.006.I	1720	20	16	55	10	2.5	6	1	inox

VA2402

Rotaia gola tonda 20 mm a pavimento forata
Slotted ground guide rail half-round 20 mm profile

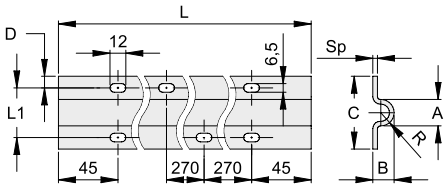

COD.	ART.	A	B	C	D	L1	R	Sp	L(m)		FINITURA
VA2402.003	720/Z3F	20	16	55	8.7	37.5	10	3.5	3	1	zinc./galv.
VA2402.006	720/ZF	20	16	55	8.7	37.5	10	3.5	6	1	zinc./galv.
VA2402.003.I	1720/3F	20	16	55	8.7	37.5	10	2.5	3	1	inox
VA2402.006.I	1720F	20	16	55	8.7	37.5	10	2.5	6	1	inox

VA2403

Rotaia gola tonda 20 mm a pavimento a cementare tipo 1
Ground guide rail half-round 20 mm profile cement fixing type 1

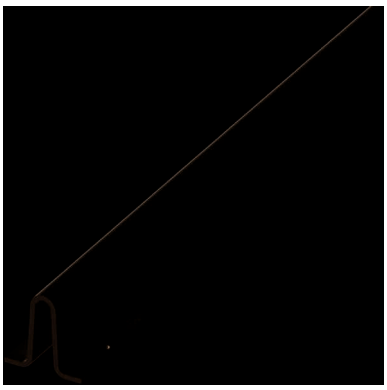

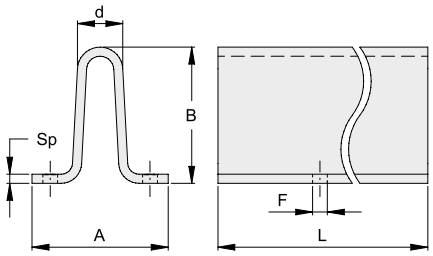

COD.	ART.	A	B	d	F	Sp	L(m)		FINITURA
VA2403.003	620/Z3	60	60	20	6.5	4	3	1	zinc./galv.
VA2403.006	620/Z	60	60	20	6.5	4	6	1	zinc./galv.

VA2404

Rotaia gola tonda 20 mm a pavimento a cementare tipo 2
Ground guide rail half-round 20 mm profile cement fixing type 2

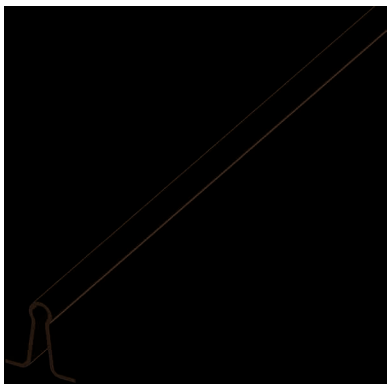

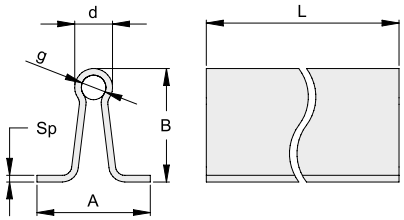

COD.	ART.	A	B	d	g	sp	L(m)		FINITURA
VA2404.003	820/Z3	60	60	20	13	3.5	3	1	zinc./galv.
VA2404.006	820/Z	60	60	20	13	3.5	6	1	zinc./galv.

VA2801

Profilo laterale per kit rotaia installazione a livello pavimento
Lateral profile guide rail kit for surface mount

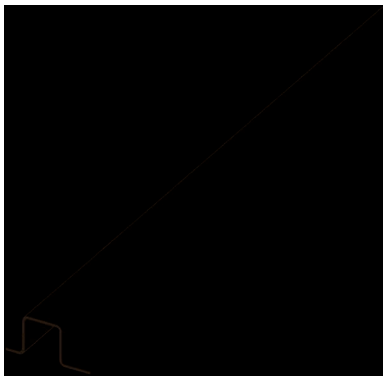

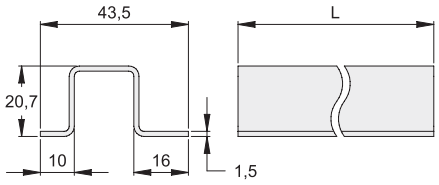

COD.	ART.	L(m)		FINITURA
VA2801.003	830Z3	3	1	zinc./galv.
VA2801.006	830Z	6	1	zinc./galv.

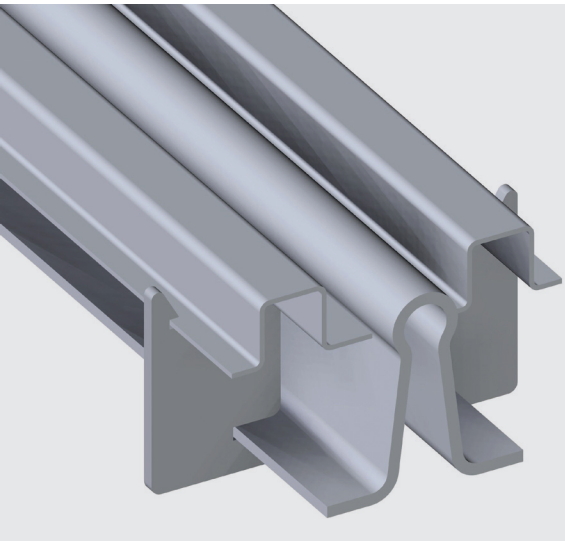

Esempio kit rotaia a pavimento
Example ground guide rail kit

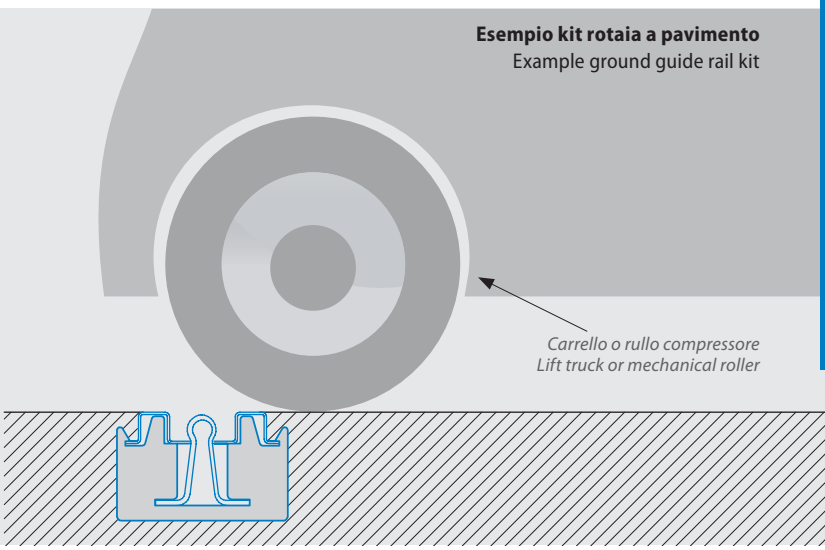

Accessori per rotaia
Ground rail accessories

VA2901

Giunto esterno per rotaia a cementare
Coupling plate for guide rail cement fixing

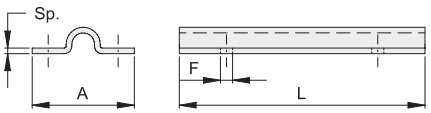

COD.	ART.	A	F	Sp	L(mm)		FINITURA
VA2901.016	616/G	50	6.5	3	130	1	zinc./galv.
VA2901.020	620/G	60	6.5	4	140	1	zinc./galv.

Solo per rotaie tipo 616-620
Suitable only for rails 616-620

VA2902

Giunto interno per rotaia a cementare
Internal coupling for cement fixing rail

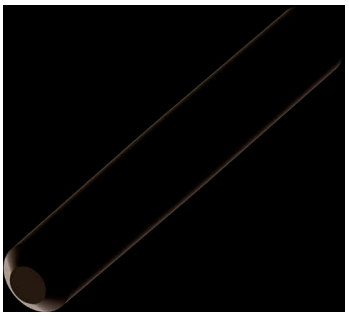

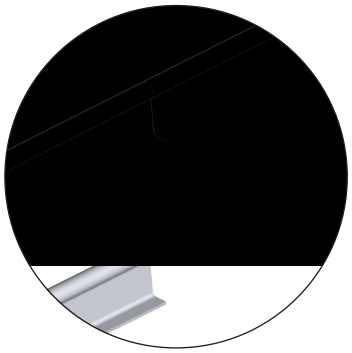

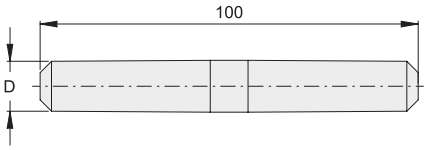

COD.	ART.	D		FINITURA
VA2902.016	816G	11	1	zinc./galv.
VA2902.020	820G	13	1	zinc./galv.

VA2903

Piastra di collegamento per rotaia
Rail coupling plate

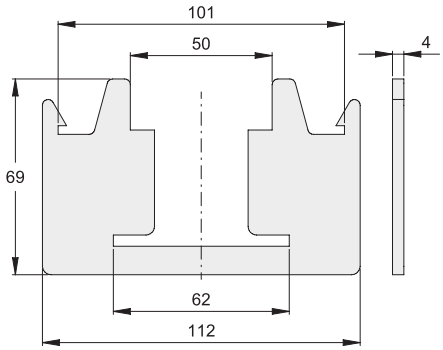

COD.	ART.		FINITURA
VA2903.020	835	1	zinc./galv.

VA2904

Raschietto universale per rotaie
Universal rail surface scraper

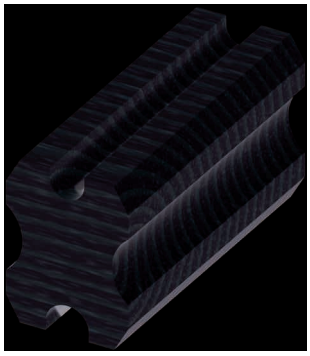

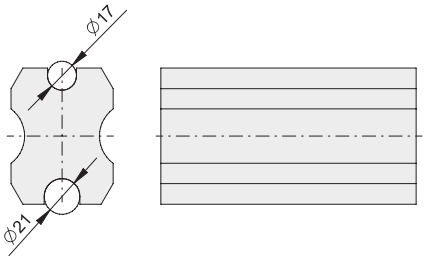

COD.	ART.		FINITURA
VA2904.016	625	1	zinc./galv.

VA3101

Oliva guida superiore
Upper guide roller

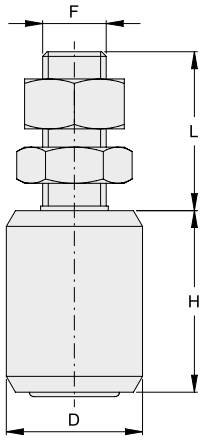

COD.	ART.	D	H	L	F		FINITURA
VA3101.A25	113	25	32	30	M14	30	zinc./galv.
VA3101.A30	117	30	40	34	M14	30	zinc./galv.
VA3101.A40	114	40	44	37	M16	10	zinc./galv.
VA3101.B40	118	40	60	41	M16	10	zinc./galv.
VA3101.I52	166.0	52	48	67	M20	10	zinc./galv.
VA3101.I60	119	60	60	65	M20	4	zinc./galv.
VA3101.A30.I	1117	30	40	34	M14	10	inox
VA3101.A40.I	1114	40	44	37	M16	10	inox
VA3101.B40.I	1118	40	60	41	M16	10	inox
VA3101.I60.I	1119	60	60	65	M20	4	inox
VA3101.A25.O	613	25	32	30	M14	30	ott./brass
VA3101.A30.O	617	30	40	34	M14	30	ott./brass
VA3101.A40.O	614	40	44	37	M16	10	ott./brass
VA3101.B40.O	618	40	60	41	M16	10	ott./brass

VA3102

Oliva conica
Tapered roller

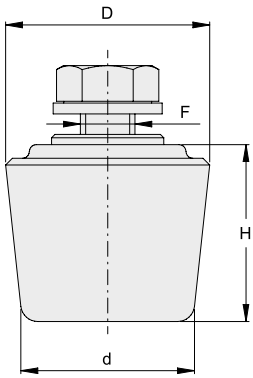

COD.	ART.	D	d	H	F		FINITURA
VA3102.T30	110	30	24	26	M8	30	zinc./galv.
VA3102.T37	111	37	30	30	M10	30	zinc./galv.

Cod. T30: Oliva conica piccola adatta per profilo UPN 40x35
Cod. T30: Small nylon tapered roller adapted to fit into profile UPN 40x35

Cod. T37: Oliva conica grande adatta per profilo UPN 50x37
Cod. T37: Big nylon tapered roller adapted to fit into profile UPN 50x37

VA3103

Oliva
Roller

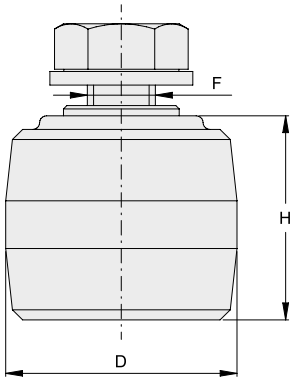

COD.	ART.	D	H	F		FINITURA
VA3103.N34	412	34	30	M10	30	zinc./galv.
VA3103.N38	112	38	30	M10	30	zinc./galv.
VA3103.N34.I	1412	34	30	M10	10	inox
VA3103.N34.O	612	34	30	M10	30	ott./brass

VA3104

Oliva regolabile con cavallotto
Adjustable roller with bracket

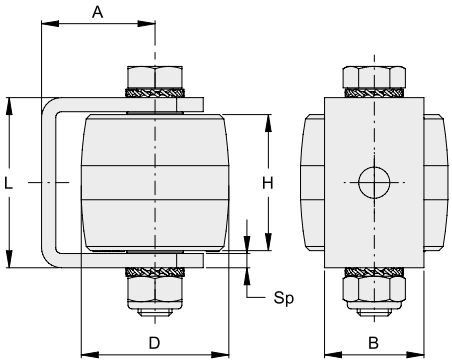

COD.	ART.	D	H	A	L	B	Sp		FINITURA
VA3104.I52	166.S	52	48	35-43	61	35	6	4	zinc./galv.
NEW **VA3104.N38**	165.S	38	30	26-34	40	25	4	10	zinc./galv.

VA3105

Oliva guida superiore con 2 cuscinetti
Upper guide roller with 2 ball bearing

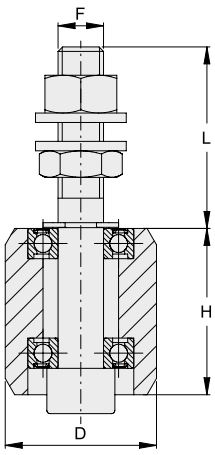

COD.	ART.	D	H	L	F			FINITURA
VA3105.A40	114.1	40	44	48	12	2	10	zinc./galv.
VA3105.A40.1	114.2	40	44	43	12	2 inox	10	zinc./galv.
NEW **VA3105.B40**	118.1	40	60	45	12	2	1	zinc./galv.
VA3105.I52	166.1	52	48	52	16	2	4	zinc./galv.
VA3105.I52.1	166.2	52	48	52	16	2 inox	4	zinc./galv.
VA3105.I60	119.1	60	60	64	20	2	1	zinc./galv.
VA3105.I60.1	119.2	60	60	64	20	2 inox	1	zinc./galv.

VA3106

Oliva lunga di guida
Long roller guide

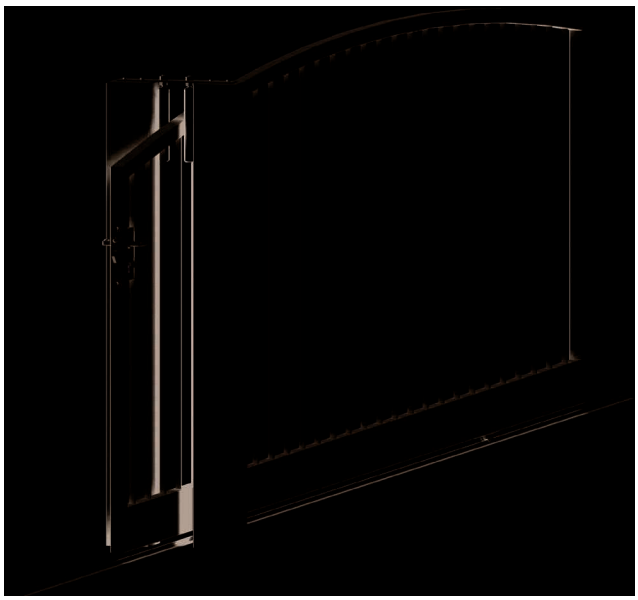

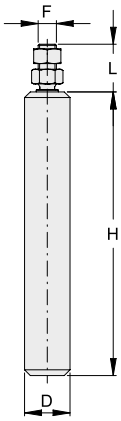

COD.	ART.	D	H	L	F		FINITURA
VA3106.C40	118.6	40	150	42	16	10	zinc./galv.
VA3106.D40	118.4	40	250	42	16	10	zinc./galv.

VA3107

Oliva lunga con supporto
Long roller guide with racket

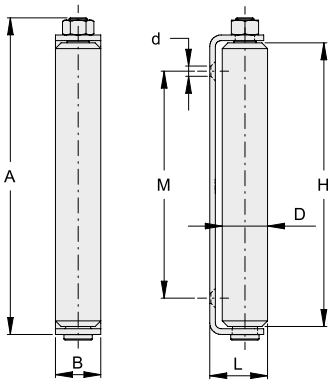

	COD.	ART.	D	H	A	B	L	M	d		FINITURA
NEW	VA3107.C40	118.7	40	150	184	40	51	110	9	4	zinc./galv.
	VA3107.D40	118.5	40	250	299	40	51	200	9	6	zinc./galv.

VA3201

Piastra di guida superiore regolabile con 2 olive
Adjustable upper guide plate with 2 rollers

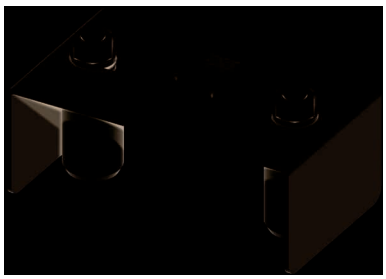

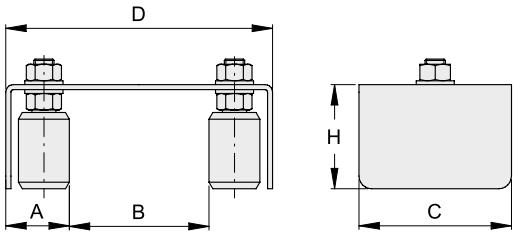

COD.	ART.	A	B	C	D	H		FINITURA	
VA3201.A30	225.2.17	39-88	4-102	100	180	62	4	zinc./galv.	con 2 olive art. 117 / with 2 guide rollers art. 117
VA3201.B40	225.2.18	50-99	4-110	120	210	82	4	zinc./galv.	con 2 olive art. 118 / with 2 guide rollers art. 118
VA3201.N34	220	38-50	36-61	60	137	36	14	zinc./galv.	con 2 olive art. 412 / with 2 guide rollers art. 412

VA3202

Piastra di guida superiore regolabile con 4 olive
Adjustable upper guide plate with 4 rollers

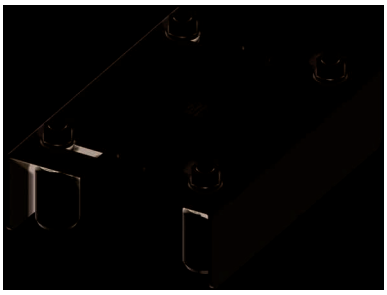

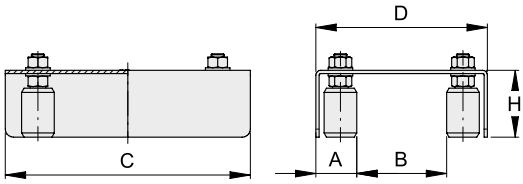

COD.	ART.	A	B	C	D	H		FINITURA	
VA3202.A30	225.4.17	39-88	4-102	220	180	62	4	zinc./galv.	con 4 olive art. 117 / with 4 guide rollers art. 117
VA3202.B40	225.4.18	50-99	4-110	300	210	82	4	zinc./galv.	con 4 olive art. 118 / with 4 guide rollers art. 118
VA3202.N34	221	39-51	36-60	220	139	35	14	zinc./galv.	con 4 olive art. 412 / with 4 guide rollers art. 412

VA3203

Piastra di guida superiore regolabile con 4 olive
Adjustable upper guide double plate with 4 rollers

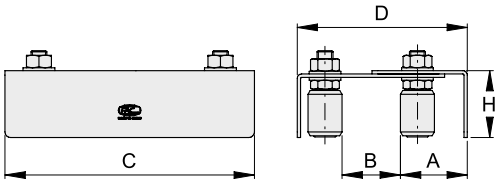

COD.	ART.	A	B	C	D	H		FINITURA	
VA3203.A30	217	40-80	40-60	220	133-179	59	8	zinc./galv.	con 4 olive art. 117 / with 4 guide rollers art. 117
VA3203.A40	214	50-87	60-80	350	174-207	65	3	zinc./galv.	con 4 olive art. 114 / with 4 guide rollers art. 114
VA3203.B40	218	50-87	60-80	350	174-207	82	3	zinc./galv.	con 4 olive art. 118 / with 4 guide rollers art. 118
VA3203.N34	212	40-80	40-60	220	133-179	46	4	zinc./galv.	con 4 olive art. 412 / with 4 guide rollers art. 412
VA3203.A30.I	1217	40-80	40-60	220	133-179	59	2	inox	con 4 olive art. 1117 / with 4 guide rollers art. 1117
VA3203.A40.I	1214	50-87	60-80	350	174-207	65	2	inox	con 4 olive art. 1114 / with 4 guide rollers art. 1114

VA3204

Piastra di guida fissaggio a muro regolabile con 4 olive
Adjustable wall mount guide plate with 4 rollers

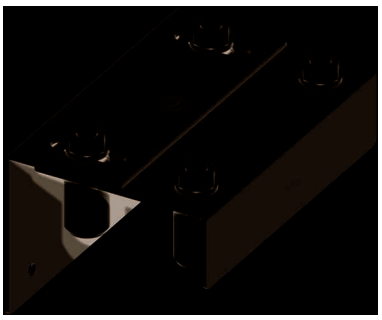

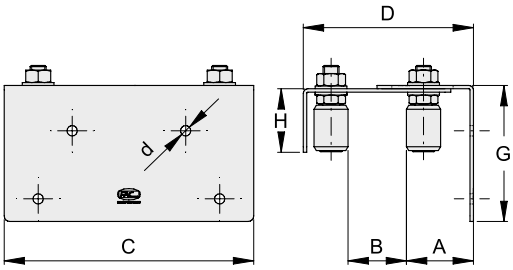

COD.	ART.	A	B	C	D	d	G	H		FINITURA	
VA3204.A30	217L	40-80	40-60	220	133-179	9	120	59	6	zinc./galv.	con 4 olive art. 117 / with 4 guide rollers art. 117
VA3204.A40	214L	50-87	60-80	350	174-207	13	200	65	2	zinc./galv.	con 4 olive art. 114 / with 4 guide rollers art. 114
VA3204.B40	218L	50-87	60-80	350	174-207	13	200	82	2	zinc./galv.	con 4 olive art. 118 / with 4 guide rollers art. 118
VA3204.N34	212L	40-80	40-60	220	133-179	9	120	46	6	zinc./galv.	con 4 olive art. 412 / with 4 guide rollers art. 412

VA3205

Piastra di guida superiore regolabile con 4 olive ad asola unica
Adjustable upper guide plate with 4 rollers with single slot

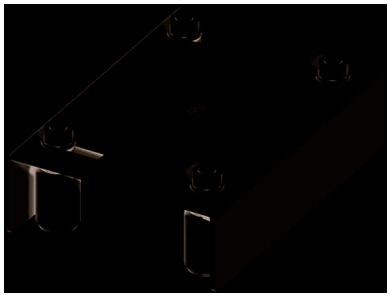

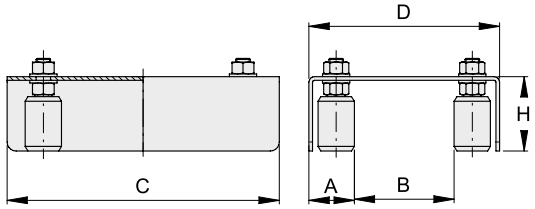

COD.	ART.	A	B	C	D	H		FINITURA	
VA3205.A30	222	40-110	0-70	220	150	60	8	zinc./galv.	con 4 olive art. 117 / with 4 guide rollers art. 117
VA3205.B40	223	50-160	0-110	300	210	82	4	zinc./galv.	con 4 olive art. 118 / with 4 guide rollers art. 118
VA3205.A30.I	1222	40-110	0-70	220	150	60	8	inox	con 4 olive art. 1117 / with 4 guide rollers art. 1117
VA3205.B40.I	1223	50-160	0-110	300	210	82	4	inox	con 4 olive art. 1118 / with 4 guide rollers art. 1118

VA3206

Piastra di guida superiore regolabile fissaggio a muro con 4 olive ad asola unica
Adjustable wall mount upper guide plate with 4 rollers with single slot

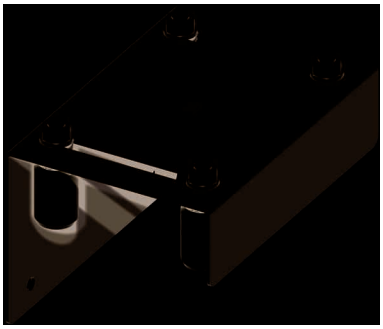

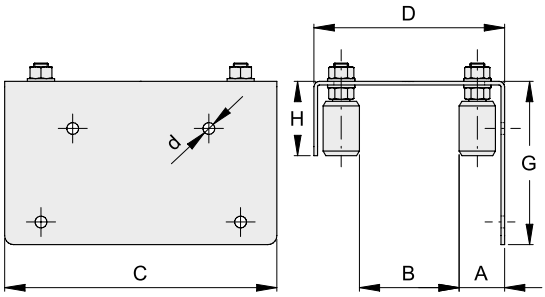

COD.	ART.	A	B	C	D	d	G	H		FINITURA	
VA3206.A30	222L	40-110	0-70	220	150	9	120	60	6	zinc./galv.	con 4 olive art. 117 / with 4 guide rollers art. 117
VA3206.B40	223L	50-160	0-110	300	210	13	180	82	3	zinc./galv.	con 4 olive art. 118 / with 4 guide rollers art. 118
VA3206.A30.I	1222L	40-110	0-70	220	150	9	120	60	6	inox	con 4 olive art. 1117 / with 4 guide rollers art. 1117
VA3206.B40.I	1223L	50-160	0-110	300	210	13	180	82	3	inox	con 4 olive art. 1118 / with 4 guide rollers art. 1118

VA3207

Supporto di guida superiore regolabile con 2 olive ad asola unica fissaggio a muro
Adjustable wall mount upper guide bracket with 2 rollers with single slot

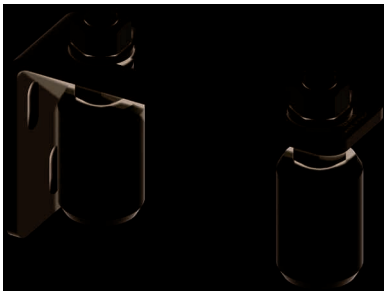

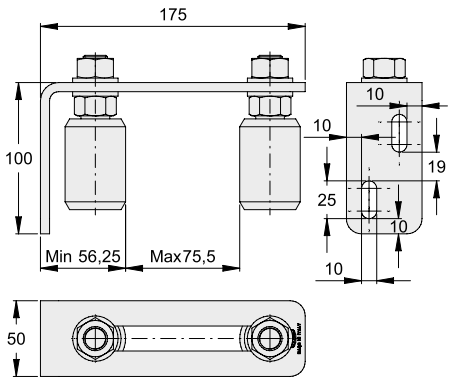

COD.	ART.		FINITURA	
VA3207.B40	224L	4	zinc./galv.	con 2 olive art. 118 / with 2 guide rollers art. 118

VA3301

Supporto guida regolabile con 2 olive a muro
Adjustable wall mount tubular guide support with 2 rollers

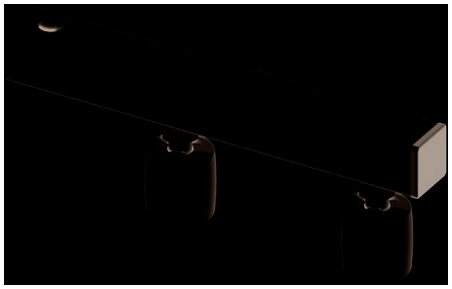

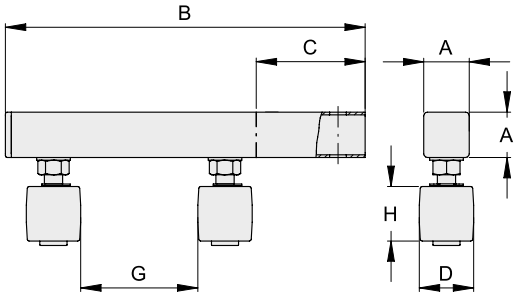

COD.	ART.	A	B	C	D	H	Gmax	Kg			FINITURA	
VA3301.A30	226.17	35	318	110	30	40	120	200	1	6	zinc./galv.	con 2 olive art. 117 / with 2 guide rollers art. 117
VA3301.A40	226.14	35	318	110	40	44	110	400	1	6	zinc./galv.	con 2 olive art. 114 / with 2 guide rollers art. 114
VA3301.B40	226.18	50	397	120	40	60	150	500	1	4	zinc./galv.	con 2 olive art. 118 / with 2 guide rollers art. 118
VA3301.I60	226.19	50	397	120	60	60	130	600	1	4	zinc./galv.	con 2 olive art. 119 / with 2 guide rollers art. 119

VA3302

Supporto guida regolabile con piastra a 4 fori con 2 olive a fissare
Adjustable tubular guide support with 4 holes plate and 2 rollers to fix

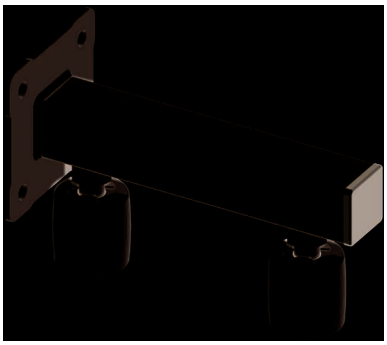

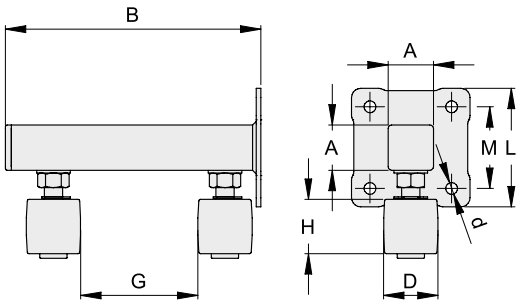

COD.	ART.	A	B	D	H	Gmax	d	L	M		FINITURA	
VA3302.A30	227.17	35	213	30	40	120	11	110x110	80x80	4	zinc./galv.	con 2 olive art. 117 / with 2 guide rollers art. 117
VA3302.A40	227.14	35	213	40	44	110	11	110x110	80x80	4	zinc./galv.	con 2 olive art. 114 / with 2 guide rollers art. 114
VA3302.B40	227.18	50	282	40	60	150	13	130x130	90x90	4	zinc./galv.	con 2 olive art. 118 / with 2 guide rollers art. 118
VA3302.I60	227.19	50	282	60	60	130	13	130x130	90x90	4	zinc./galv.	con 2 olive art. 119 / with 2 guide rollers art. 119

VA3401 NEW

Piastra di guida superiore regolabile con 2 olive fissaggio su 2 colonne
Adjustable guider roller plate with 2 rollers to mount between 2 colunms

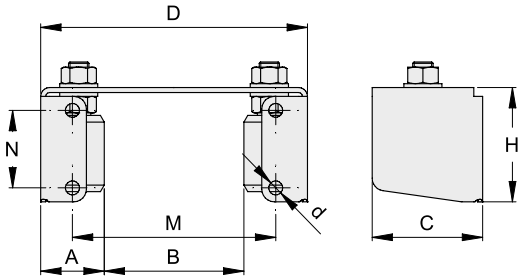

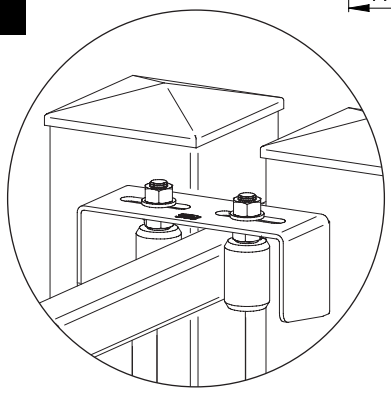

COD.	ART.	A	B	C	D	H	M	N	d		FINITURA	
VA3401.A30	228.17	39-81.5	2-87	66	165	79	127	55	9	4	zinc./galv.	con 2 olive art. 117 / with 2 guide rollers art. 117
VA3401.B40	228.18	50-103	4-10	87	210	90	160	61	11	4	zinc./galv.	con 2 olive art. 118 / with 2 guide rollers art. 118

VA3402 NEW

Piastra di guida angolare regolabile con 2 olive a fissare
Adjustable angular roller plate with 2 rollers to fix

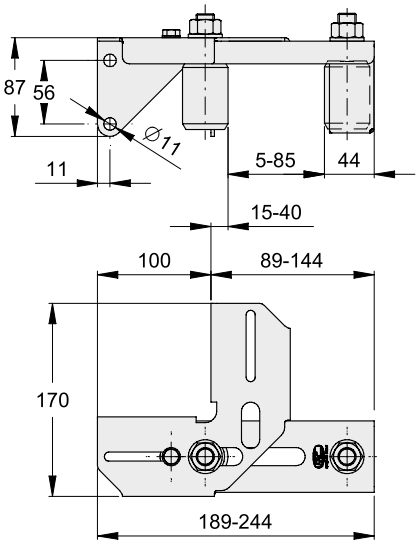

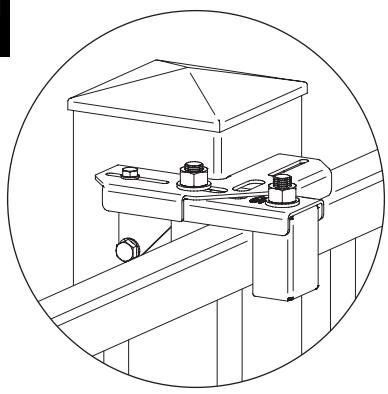

COD.	ART.		FINITURA	
VA3402.B40	229.18	2	zinc./galv.	con 2 olive art. 118 / with 2 guide rollers art. 118

VA3501 NEW

Piastra di guida regolabile per cancello telescopico con 4 olive
Adjustable roller plate guide for telescopic gate with 4 rollers

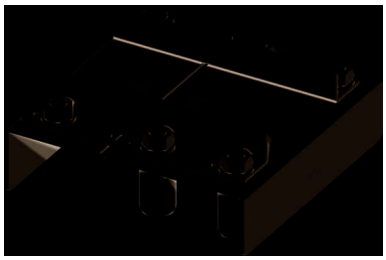

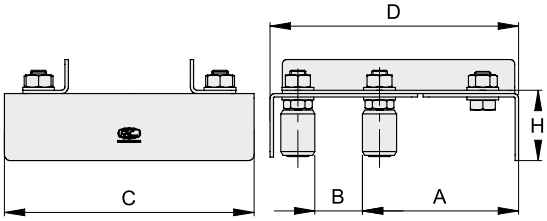

COD.	A	B	C	D	H		FINITURA	
VA3501.A30	96-152	42-60.5	220	240.5	56	1	zinc./galv.	con 4 olive art. 117 / with 4 guide rollers art. 117
VA3501.B40	136.5-158	60-81.5	350	307	82	1	zinc./galv.	con 4 olive art. 118 / with 4 guide rollers art. 118

VA3502 NEW

Guida 4 olive in linea per cancello telescopico
Connection rollers support for telescopic gate

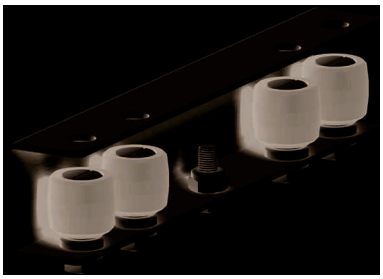

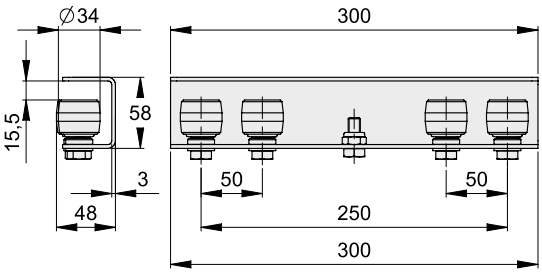

COD.		FINITURA	
VA3502.N34	1	zinc./galv.	con 4 olive art. 412 / with 4 guide rollers art. 412

VA3601

Ruota superiore di guida in ferro
Steel upper guide roller

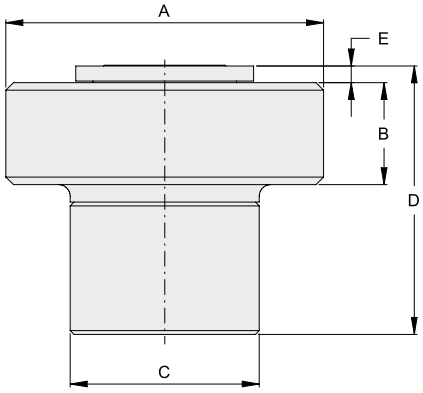

COD.	ART.	A	B	C	D	E		FINITURA
VA3601.035	159	35	14	25	30	2	24	zinc./galv.
VA3601.042	160	42	14	25	30	2	12	zinc./galv.
VA3601.052	161	52	14	25	30	2	12	zinc./galv.

VA3602

Ruota superiore di guida in ferro con cuscinetto a sfere
Steel upper guide roller with ball bearing

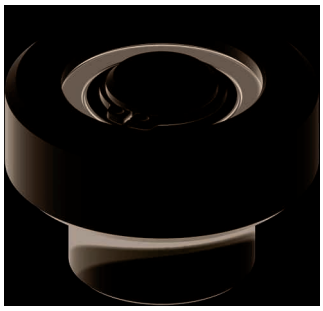

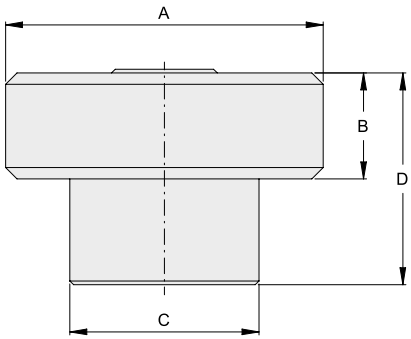

COD.	ART.	A	B	C	D			FINITURA
VA3602.035	159C	35	14	25	28	1	24	zinc./galv.
VA3602.042	160C	42	14	25	28	1	12	zinc./galv.
VA3602.052	161C	52	14	25	28	1	12	zinc./galv.

Protezioni per oliva
Carters for roller

VA3901

Protezione per oliva di guida in ferro
Steel carter for guide roller

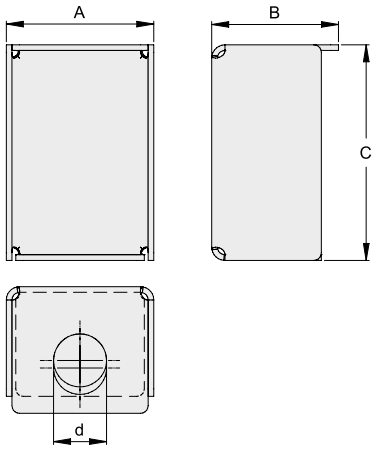

COD.	ART.	A	B	C	d		FINITURA
VA3901.A30	517	39	33.5	57	14	12	zinc./galv.
VA3901.B40	518	50	43.5	78	16	8	zinc./galv.
VA3901.I60	519	71	65.5	95	20	6	zinc./galv.

Battenti di arresto e di sicurezza a terra
Surface limit stops and safety strikes

VA4101

Battente di arresto a saldare
Limit stop to weld

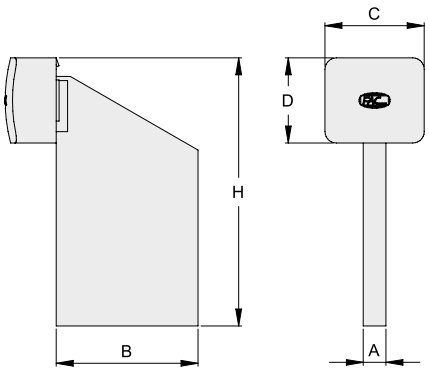

COD.	ART.	A	B	C	D	H		FINITURA
VA4101.092	115	8	50	35	30	92	20	zinc./galv.
VA4101.115	116	10	70	45	36	115	10	zinc./galv.
VA4101.092.I	1115	8	50	35	30	92	10	inox
VA4101.115.I	1116	8	70	45	36	115	10	inox

VA4102

Battente di arresto con piastra a 4 fori a fissare
Limit stop with 4 holes plate to fix

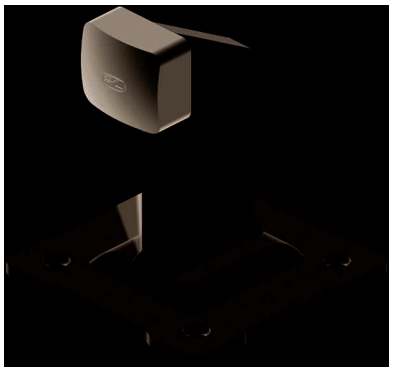

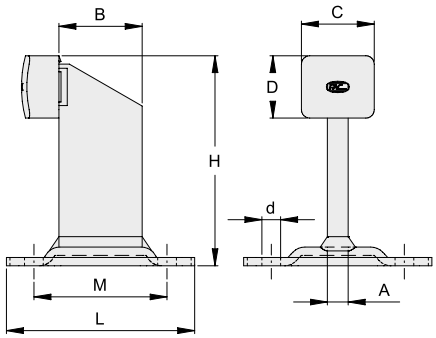

COD.	ART.	A	B	C	D	L	H	M	d		FINITURA
VA4102.101	115P	10	40	35	30	90x90	101	64x64	9	10	zinc./galv.
VA4102.108	116P	10	50	45	36	110x110	108	80x80	11	10	zinc./galv.
VA4102.121	116GP	10	70	45	36	110x130	121	70x90	13	10	zinc./galv.
VA4102.101.I	1115P	8	50	35	30	90x90	100	64x64	9	2	inox
VA4102.121.I	1116GP	8	70	45	36	110x130	121	70x90	13	2	inox

VA4103

Battente ammortizzatore a saldare
Limit stop with damper to weld

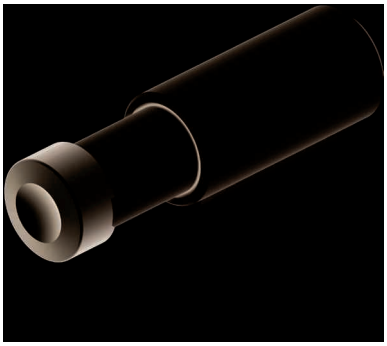

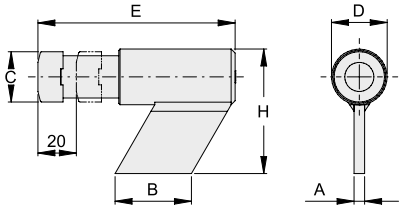

COD.	ART.	A	B	C	D	E	H		FINITURA
VA4103.092	116A	8	57	38	42	130-150	92	4	zinc./galv.

VA4104

Battente ammortizzatore con piastra a 4 fori a fissare
Limit stop with damper with 4 holes plate to fix

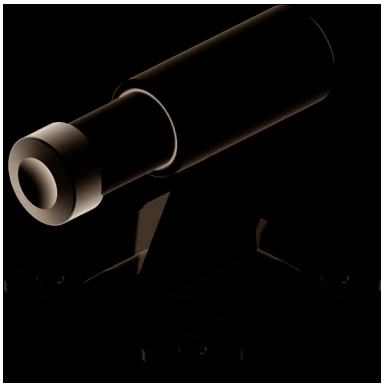

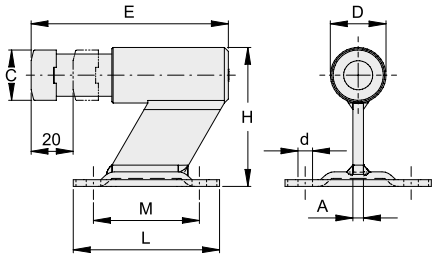

COD.	ART.	A	C	D	E	L	H	M	d		FINITURA
VA4104.103	116AP	8	38	42	130-150	110x110	103	80x80	11	4	zinc./galv.

VA4201

Battente aperto per serratura a gancio
Open strike for hook-lock

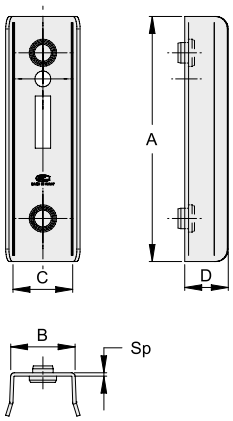

COD.	ART.	A	B	C	D	Sp		FINITURA
VA4201.040.L	355.40	216	48	42	32.5	3	10	lucido/black
VA4201.050.L	355.50	216	58	52	37.5	3	10	lucido/black
VA4201.060.L	355.60	216	70	62	43.5	4	10	lucido/black
VA4201.080.L	355.80	216	90	84	49.5	4	10	lucido/black

Tappi di arresto in plastica asportabili
Removable rubbers damper

VA4202

Battente chiuso per serratura a gancio
Closed strike box for hook-lock

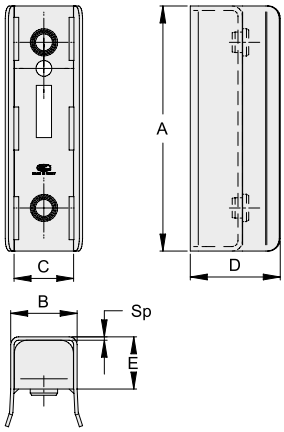

COD.	ART.	A	B	C	D	E	Sp		FINITURA
VA4202.040.L	356.40	216	48	42	74	46	3	6	lucido/black
VA4202.050.L	356.50	216	58	52	79	46	3	6	lucido/black
VA4202.060.L	356.60	216	70	62	85	47	4	6	lucido/black
VA4202.080.L	356.80	216	90	84	91	47	4	2	lucido/black

Tappi di arresto in plastica asportabili
Removable rubbers damper

VA4203

Battente di sicurezza
Safety strike

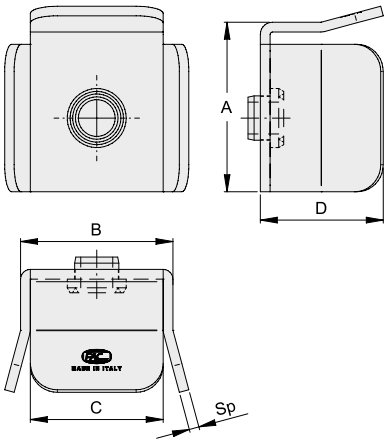

COD.	ART.	A	B	C	D	Sp		FINITURA
VA4203.040.L	357.40	59	52	44	45	4	10	lucido/black
VA4203.050.L	357.50	69	62	54	50	4	10	lucido/black
VA4203.060.L	357.60	79	72	64	55	4	10	lucido/black
VA4203.080.L	357.80	99	94	86	65	4	10	lucido/black

Gruppo trasmissione telescopico
Telescopic trasmission set

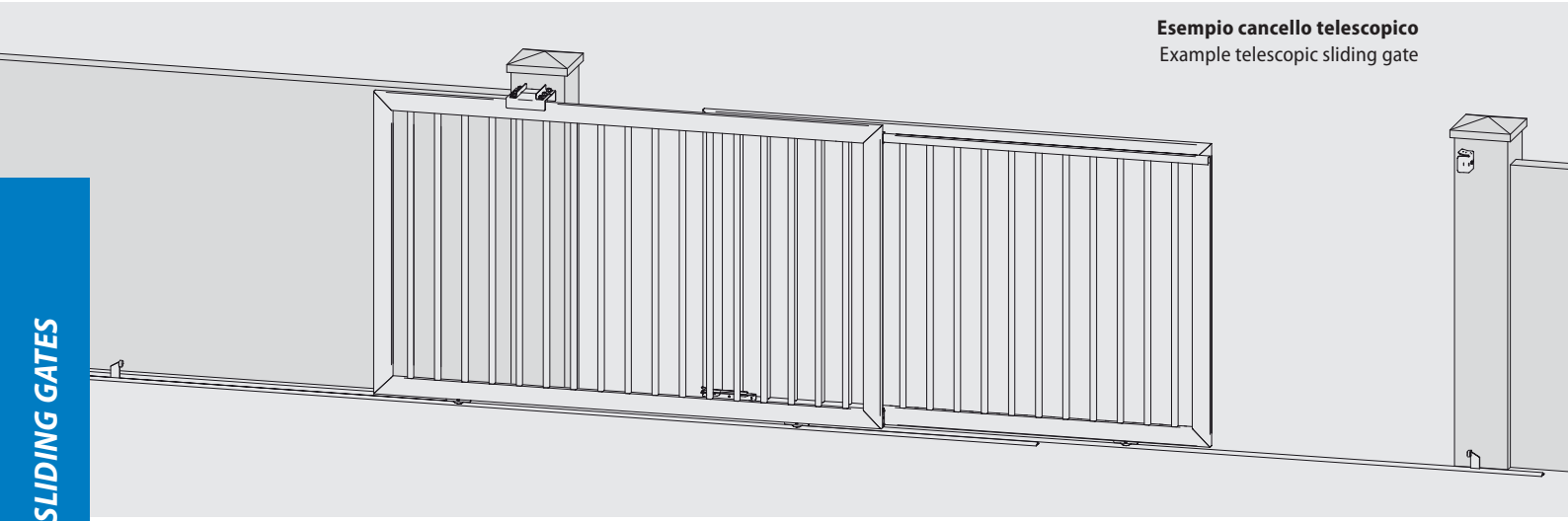

Esempio cancello telescopico
Example telescopic sliding gate

VA5101 NEW

Gruppo trasmissione telescopico completo
Complete telescopic transmission set

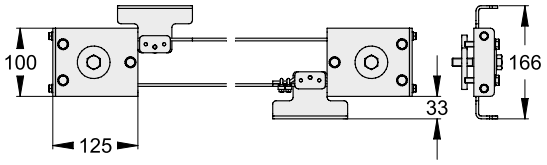

COD.	MAX OPENING		FINITURA
VA5101.004	4	1	zinc./galv.
VA5101.008	8	1	zinc./galv.
VA5101.011	11.4	1	zinc./galv.
VA5101.015	15.4	1	zinc./galv.

Gruppo aggancio rapido per cancelli telescopici
Quick on coupling for telescopic gates

VA5201 NEW

Aggancio rapido
Quick on coupling

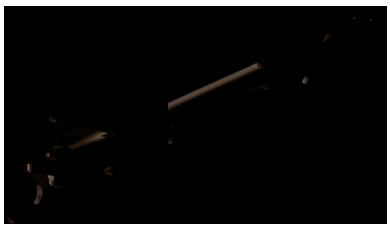

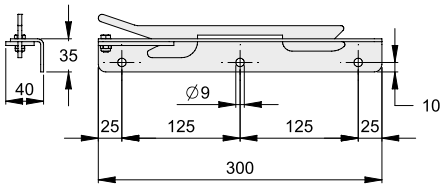

COD.		FINITURA
VA5201.004	1	zinc./galv.

Carter protettivo
Protection carter

VA3502 + VA5401

Vista sezione profilo guida kit telescopico
Sectional view telescopic kit guide profile

1


2


3
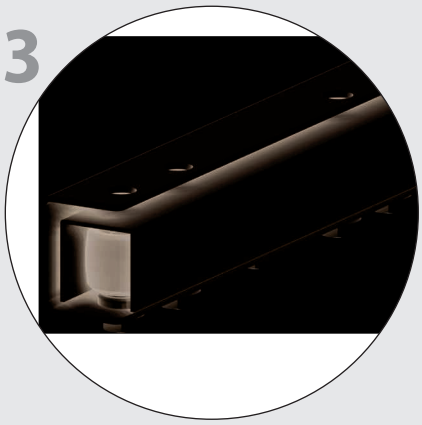

VA5301 NEW

Carter protettivo per gruppo trasmissione telescopico
Protective carter for telescopic transmission set

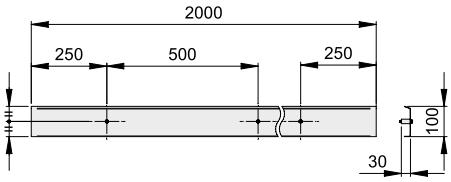

COD.		FINITURA
VA5301.002	1	zinc./galv.

Profilo guida superiore
Upper guide profile

VA5401 NEW

Profilo guida superiore gruppo telescopico
Telescopic upper guide profile

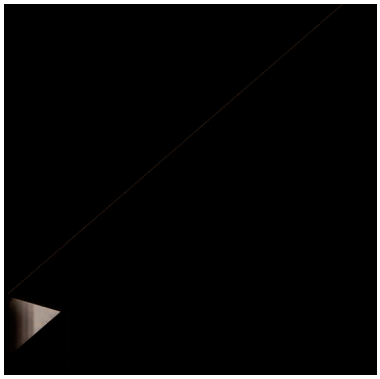

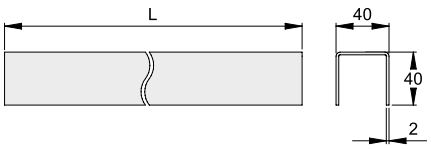

COD.	L		FINITURA
VA5401.003	3	1	zinc./galv.
VA5401.006	6	1	zinc./galv.

VA6101

Cremagliera profilo quadro
Square profile rack

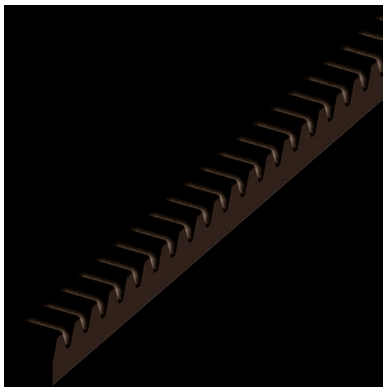

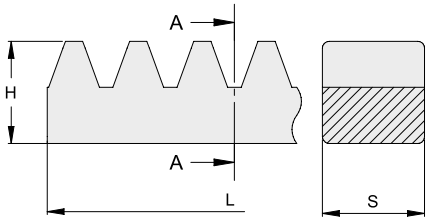

COD.	ART.	L	H	S	Modulo		FINITURA
VA6101.401	622/Z1	1000	22	22	4	1	zinc./galv.
VA6101.402	622/Z2	2000	22	22	4	1	zinc./galv.
NEW **VA6101.602**	640/Z2	2000	30	30	6	1	zinc./galv.
VA6101.401.L	622/N1	1000	22	22	4	1	lucido/black
VA6101.402.L	622/N2	2000	22	22	4	1	lucido/black

VA6102

Cremagliera profilo quadro forata
Square profile drilled rack

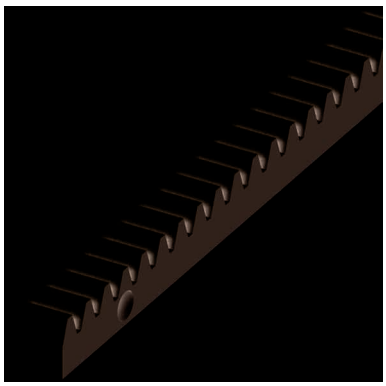

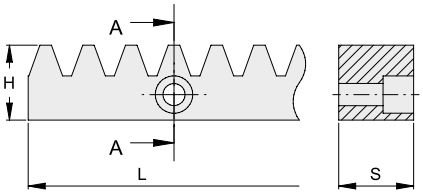

COD.	ART.	L	H	S		FINITURA
VA6102.001	622/ZF	1000	22	22	1	zinc./galv.
VA6102.002	622/ZF2	2000	22	22	1	lucido/black

VA6200

Cremagliera rettangolare 30x12 asolata
Rectangular profile rack 30x12 slotted

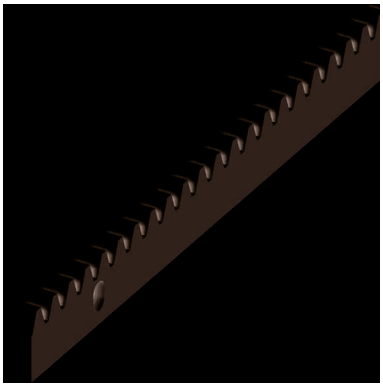

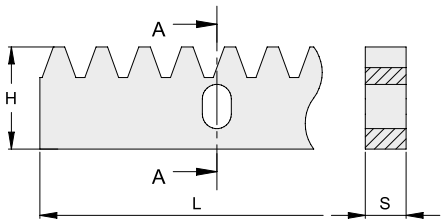

COD.	ART.	L	H	S		FINITURA
VA6200.001	630/ZF	1000	30	12	1	zinc./galv.
VA6200.002	630/ZF2	2000	30	12	1	zinc./galv.
VA6200.001.I	1630	1000	30	12	1	inox

VA6201

Cremagliera rettangolare 30x12 con distanziali a saldare
Rectangular profile rack 30x12 with weld on spacers

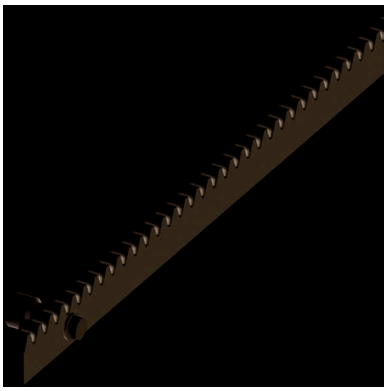

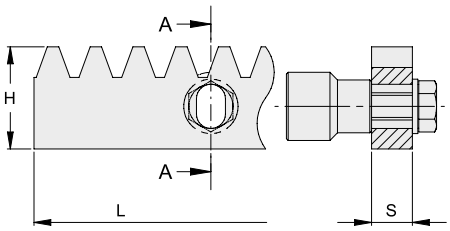

COD.	ART.	L	H	S		FINITURA
VA6201.001	630/ZS	1000	30	12	1	zinc./galv.
VA6201.002	630/ZS2	2000	30	12	1	zinc./galv.

VA6202

Cremagliera rettangolare 30x12 con distanzaili da avvitare
Rectangular profile rack 30x12 with bolt on spacers

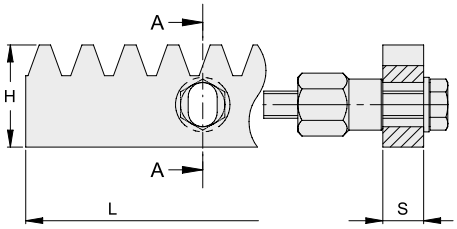

COD.	ART.	L	H	S		FINITURA
VA6202.001	630/ZA	1000	30	12	1	zinc./galv.
VA6202.002	630/ZA2	2000	30	12	1	zinc./galv.

VA6211

Distanziale a saldare completo
Weld on spacer

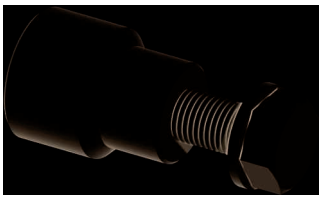

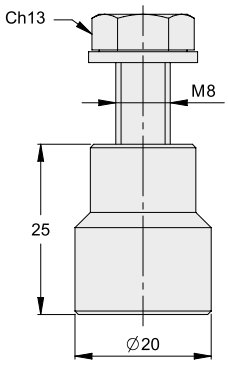

COD.	ART.		FINITURA
VA6211.025	635/S	30	zinc./galv.
VA6211.025.I	1635	30	inox

VA6212

Distanziale da avvitare completo
Bolt on spacer

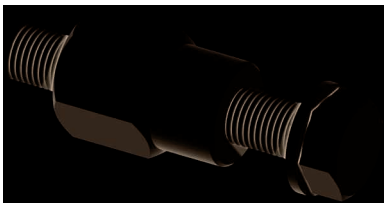

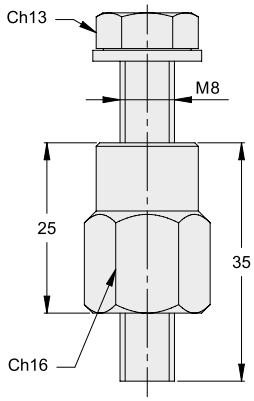

COD.	ART.		FINITURA
VA6212.025	635/A	30	zinc./galv.

Kit rotaia a pavimento
Ground guide rail kit

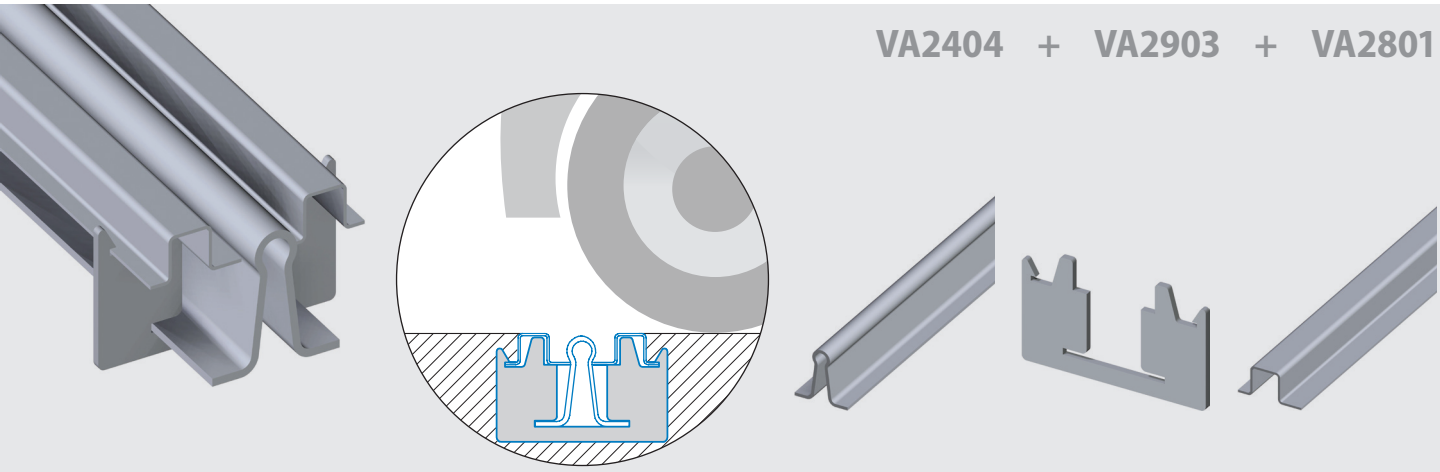

Il Kit rotaia a pavimento permette un agevole transito dei veicoli, eliminando il salto causato dalla sporgenza della rotaia tradizionale e garantisce l'integrità del profilo.
The ground guide rail kit provides easy passage of vehicles removing the leap caused by the protrusion of traditional rail and ensures the integrity of the profile.

Sequenza di montaggio
Sequence assembly

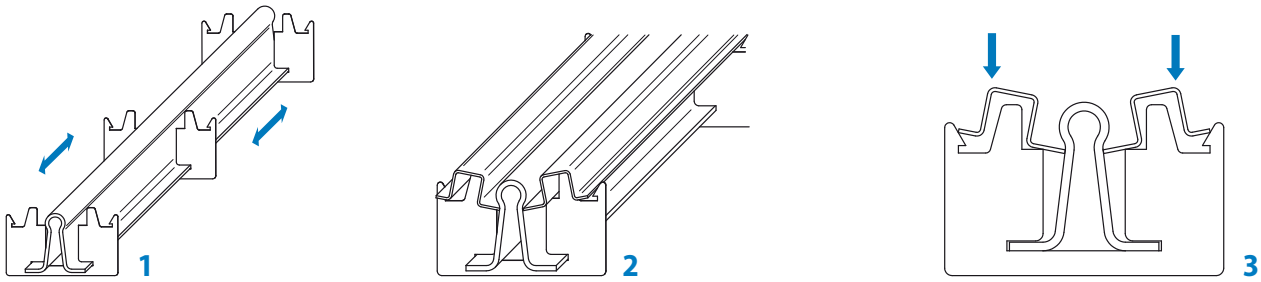

Kit rotaie zincate per portoni scorrevoli con fissaggio a livello stradale tramite annegamento nel cemento.

1. Inserire i supporti lungo la rotaia.
2. Posizionare i due profili inserendoli tra i supporti e la rotaia lasciandoli quindi sollevati esternamente.
3. Fissare i profili ad incastro esercitandovi una pressione nei punti indicati in figura in corrispondenza di ciascun supporto.

Galvanized cement ground fixing Rail Kit for sliding gates.

1. Insert the supports throughout the rail's length.
2. Position the two profiles between the supports and the rail, keep the profiles raised externally.
3. Fix the profiles by pressing on the areas indicated in the figure in correspondence to each support.

KA2404.003
820K3

Kit rotaia a pavimento 3 m. / Ground guide rail kit 3 m.

COD.	ART.	DESCRIZIONE - DESCRIPTION	
VA2404.003	820/Z3	Rotaia sagomata zincata 3 m / Ground guide rail half-round profile 3 m.	1
VA2801.003	830Z3	Profilo aperto a omega 3 m. / Lateral profile guide rail 3 m.	2
VA2903.020	835	Piastra per incastro zincata / Coupling plate	3

KA2404.006
820K

Kit rotaia a pavimento 6 m. / Ground guide rail kit 6 m.

COD.	ART.	DESCRIZIONE - DESCRIPTION	
VA2404.006	820/Z	Rotaia sagomata zincata, gola tonda 6 m. / Ground guide rail half-round profile 6 m.	1
VA2801.006	830Z	Profilo aperto a omega 6 m. / Lateral profile guide rail 6 m.	2
VA2903.020	835	Piastra per incastro zincata / Coupling plate	5

Tabella dimensionamento cancello telescopico a due ante

Dimensioning table telescopic sliding gate with two leaves

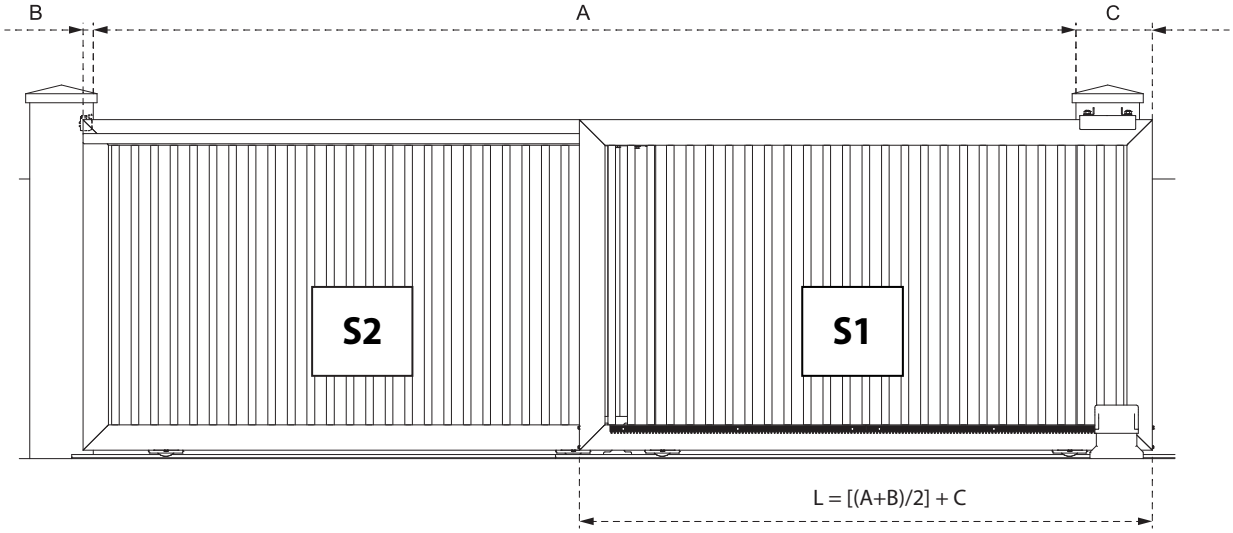

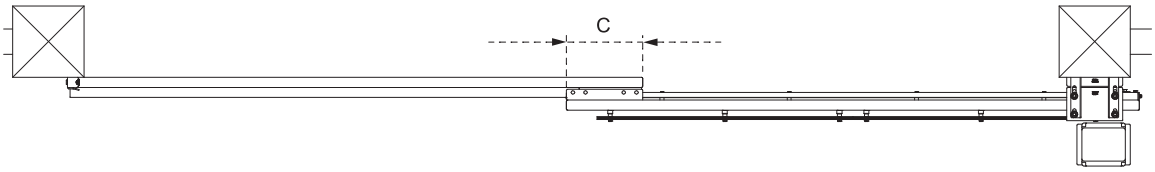

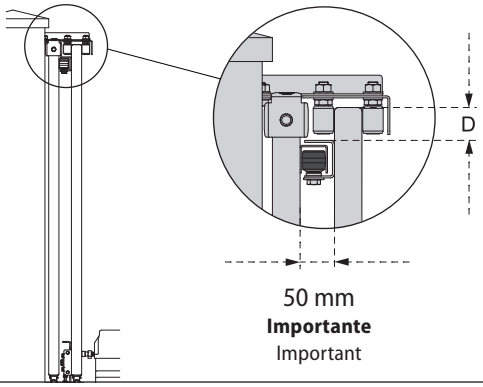

Tabella dimensioni
Dimension table

COD.	A max (m)	C (m)	D min (mm)	S2 max (kg)
KA5100.004	4	0,3	50	300
KA5100.008	8	0,3	50	300
KA5100.011	11,4	0,6	70	400
KA5100.015	15,4	0,6	70	400

Dimensionamento ante
Sections dimensioning

COD.	APERTURA / OPENING (A)	L (m) con/with B=0,08
KA5100.004	3	1,84
KA5100.004	4	2,34
KA5100.008	5	2,84
KA5100.008	6	3,34
KA5100.008	7	3,84
KA5100.008	8	4,34
KA5100.011	9	5,14
KA5100.011	10	5,64
KA5100.011	11	6,14
KA5100.015	12	6,64
KA5100.015	13	7,14
KA5100.015	14	7,64
KA5100.015	15	8,14

Esempio misure fuori tabella
Example dimensions not in table

A 3,5 m

B 0,06 m (che scegliete voi/that you choose)

C 0,3 m (da tabella sopra/from above table)

L [(A+B)/2] + C

L = [(3,5+0,06)/2] + 0,3

L = [(3,56)/2] + 0,3

L = 1,78 + 0,3

L = 2,08

Kit cancello telescopico a due ante
Telescopic kit for sliding gate with two leaves

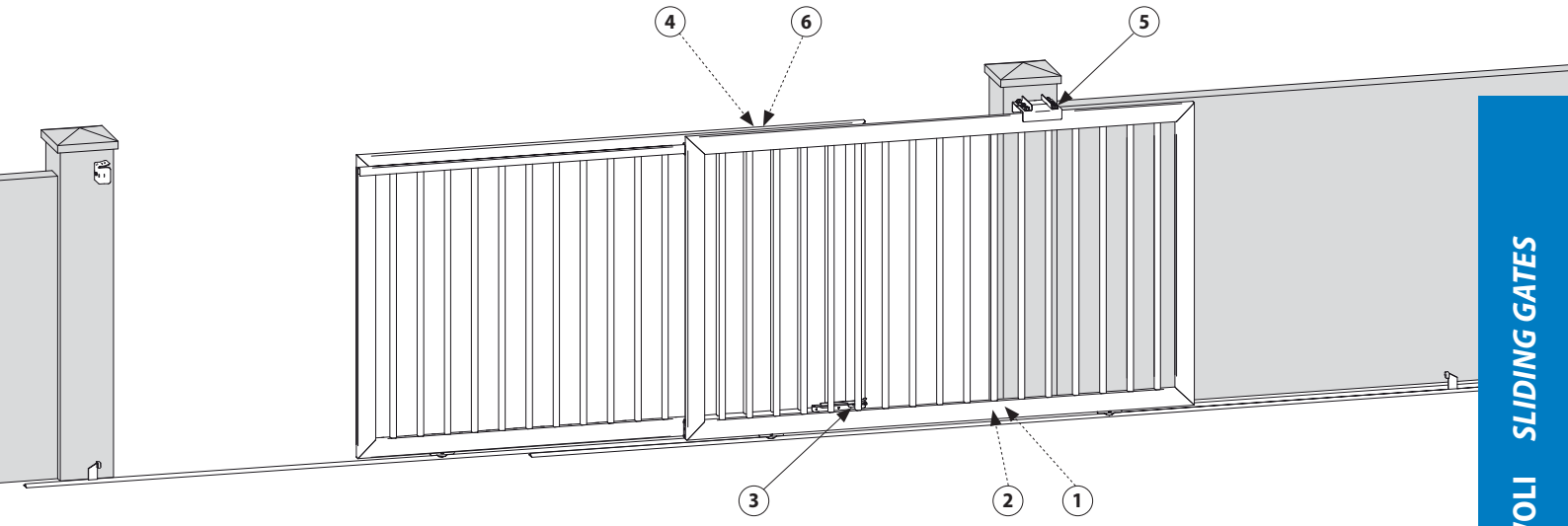

Elenco parti Component list

Opzionale Optional

1 VA5101 | 2 VA5301.002 | 3 VA5201.004 | 4 VA3502.N34 | 5 VA3501 | 6 VA5401

KA5100.004 NEW

Kit telescopico apertura 4 m. / Telescopic kit opening up to 4 m.

COD.	DESCRIZIONE - DESCRIPTION	
VA3501.A30	Piastra con olive d. 30x40 / Plate with guide rollers d. 30x40	1
VA3502.N34	Supporto olive di collegamento due ante / Connection rollers support	1
VA5301.002	Carter protezione cavo / Cable protection carter	1
VA5101.004	Ruote con fune e attacchi-luce max 4 m. / Wheels with cable and fittings-max opening 4 m.	1
VA5201.004	Aggancio rapido ante / Quick on coupling	1

KA5100.008 NEW

Kit telescopico apertura 8 m. / Telescopic kit opening up to 8 m.

COD.	DESCRIZIONE - DESCRIPTION	
VA3501.A30	Piastra con olive d. 30x40 / Plate with guide rollers d. 30x40	1
VA3502.N34	Supporto olive di collegamento due ante / Connection rollers support	1
VA5301.002	Carter protezione cavo / Cable protection carter	2
VA5101.008	Ruote con fune e attacchi-luce max 8 m. / Wheels with cable and fittings-max opening 8 m.	1
VA5201.004	Aggancio rapido ante / Quick on coupling	1

KA5100.011 NEW

Kit telescopico apertura 11,4 m. / Telescopic kit opening up to 11,4 m.

COD.	DESCRIZIONE - DESCRIPTION	
VA3501.B40	Piastra con olive d. 40x60 / Plate with guide rollers d. 30x40	1
VA3502.N34	Supporto olive di collegamento due ante / Connection rollers support	2
VA5301.002	Carter protezione cavo / Cable protection carter	3
VA5101.011	Ruote con fune e attacchi-luce max 11,4 m. / Wheels with cable and fittings-max opening 11,4 m.	1
VA5201.004	Aggancio rapido ante / Quick on coupling	1

KA5100.015 NEW

Kit telescopico apertura 15,4 m. / Telescopic kit opening up to 15,4 m.

COD.	DESCRIZIONE - DESCRIPTION	
VA3501.B40	Piastra con olive d. 40x60 / Plate with guide rollers d. 30x40	1
VA3502.N34	Supporto olive di collegamento due ante / Connection rollers support	2
VA5301.002	Carter protezione cavo / Cable protection carter	4
VA5101.015	Ruote con fune e attacchi-luce max 15,4 m. / Wheels with cable and fittings-max opening 15,4 m.	1
VA5201.004	Aggancio rapido ante / Quick on coupling	1

4
FAC
GATE ACCESSORIES
MADE IN ITALY

ACCESSORI PER PORTONI SOSPESI

Accessories for hanging doors

Tutte le misure sono espresse in mm dove non diversamente specificato.
All measurements are in mm unless otherwise specified.

Esempi di applicazione
Examples of application

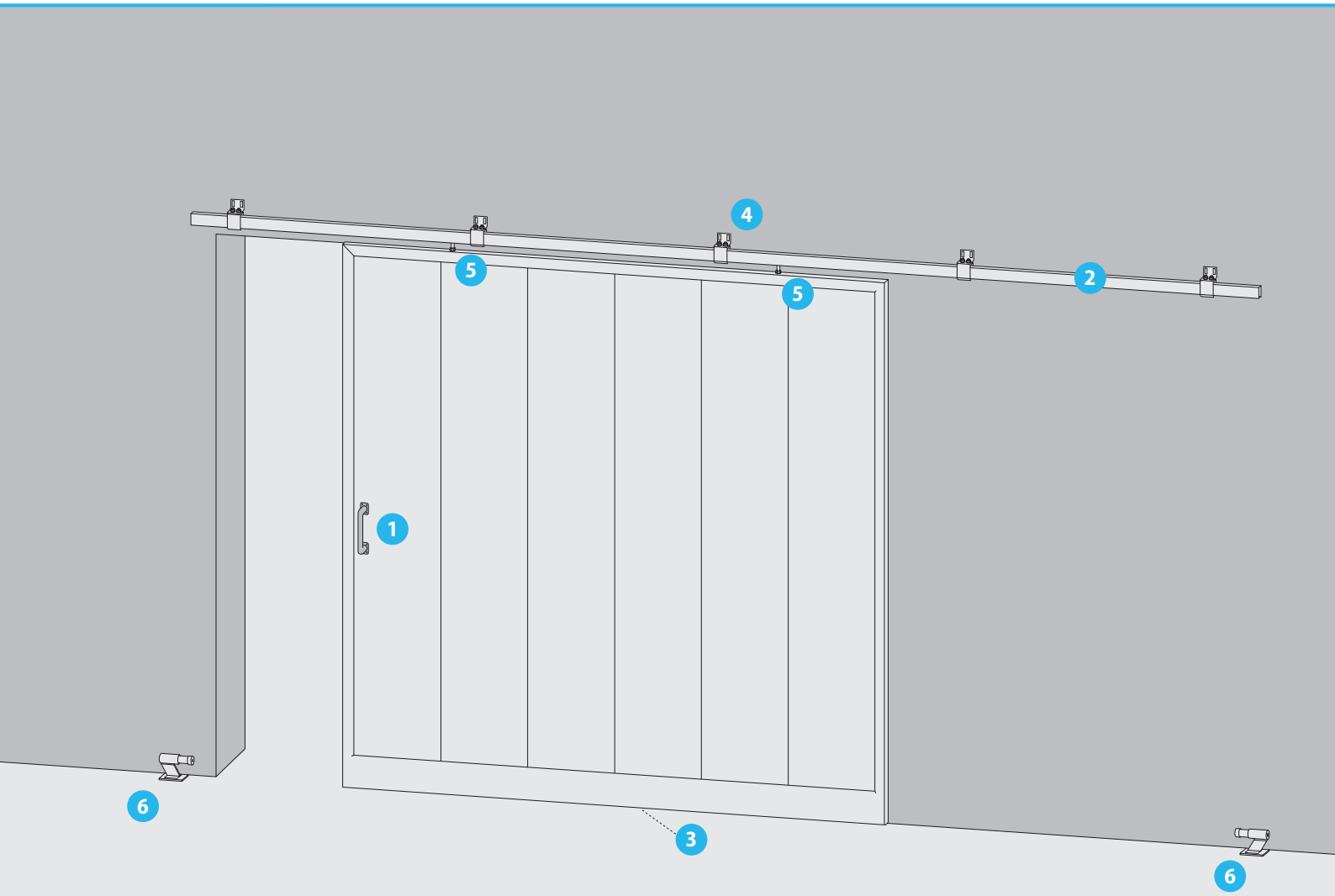

1. Maniglie e serrature a gancio / Handles and hook-locks

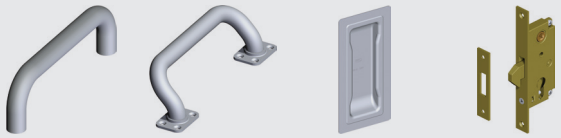

VB1203 VB1207 VB1101 VL3100

2. Rotaie / Rails

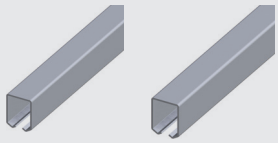

VB2103 VB2106

3. Rulli inferiori di guida / Down guide rollers

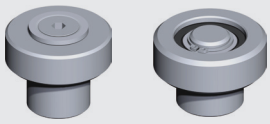

VA3601 VA3602

4. Supporti / Support brackets

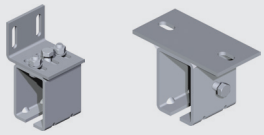

VB2201 VB2202

5. Carrelli scorrevoli / Sliding trolleys

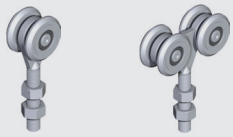

VB3211 VB3212

6. Battenti d'arresto / Limit stops

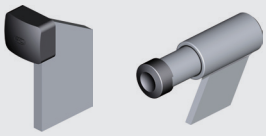

VA4101 VA4103

VB1101

Maniglia ad incasso per portoni sospesi
Flush handle for hanging doors

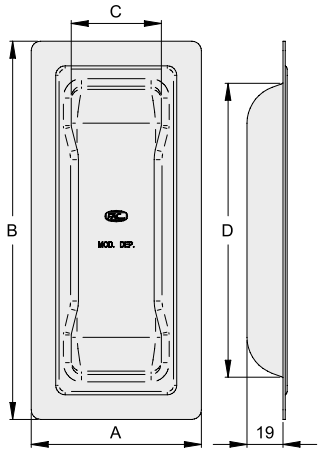

COD.	ART.	A	B	C	D		FINITURA
VB1101.094	511	52	115	29	94	20	zinc./galv.
VB1101.165	501	90	200	50	165	30	zinc./galv.
VB1101.094.I	512	52	115	29	94	20	inox
VB1101.165.I	502	90	200	50	165	30	inox

VB1102

Maniglia ad incasso per portoni sospesi a fissare
Flush handle for hanging doors to fix

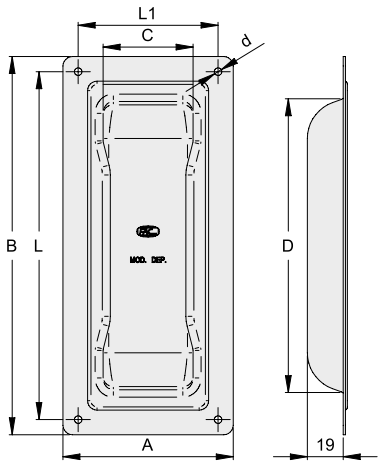

COD.	ART.	A	B	C	D	d	L	L1		FINITURA
VB1102.094	511/F	52	115	29	94	3	105	42	20	zinc./galv.
VB1102.165	501/F	90	200	50	165	4	184	74	30	zinc./galv.
VB1102.094.I	512/F	52	115	29	94	3	105	42	20	inox
VB1102.165.I	502/F	90	200	50	165	4	184	74	30	inox

VB1201

Maniglia 2 curve a saldare
2 curve tubular handle to weld

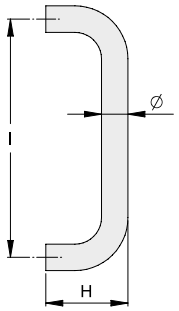

COD.	ART.	Ø	I	H		FINITURA
VB1201.020.L	531	20	180	62	10	lucido/black
VB1201.028.L	534	28	280	78	10	lucido/black

VB1202

Maniglia 4 curve a saldare
4 curve tubular handle to weld

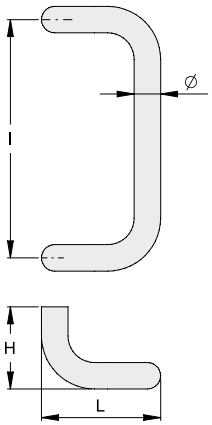

COD.	ART.	Ø	I	H	L		FINITURA
VB1202.020.L	532	20	180	62	90	10	lucido/black
VB1202.028.L	535	28	280	78	135	10	lucido/black

VB1203

Maniglia 2 curve a tappo
2 curve internal threaded tubular handle

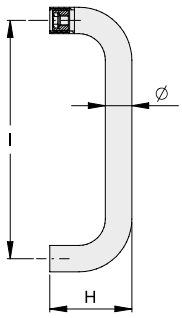

COD.	ART.	Ø	I	H		FINITURA
VB1203.020	541	20	180	62	10	zinc./galv.
VB1203.028	544	28	280	78	10	zinc./galv.
VB1203.020.V	551	20	180	62	10	vern./painted
VB1203.028.V	554	28	280	78	10	vern./painted

VB1204

Maniglia 4 curve a tappo
4 curve internal threaded tubular handle

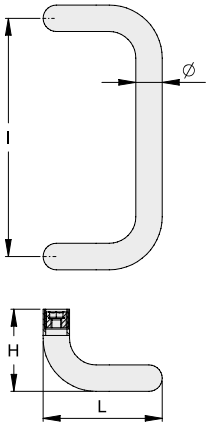

COD.	ART.	Ø	I	H	L		FINITURA
VB1204.020	542	20	180	62	90	10	zinc./galv.
VB1204.028	545	28	280	78	135	10	zinc./galv.
VB1204.020.V	552	20	180	62	90	10	vern./painted
VB1204.028.V	555	28	280	78	135	10	vern./painted

VB1205

Maniglia flangiata 2 curve a fissare
2 curve flanged tubular handle to fix

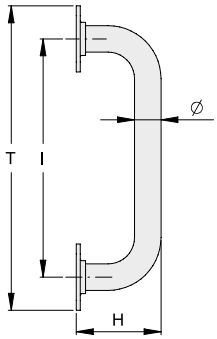

COD.	ART.	Ø	I	H	T		FINITURA
VB1205.020	561	20	180	64	230	10	zinc./galv.
VB1205.028	564	28	280	80	345	10	zinc./galv.
VB1205.020.V	571	20	180	64	230	10	vern./painted
VB1205.028.V	574	28	280	80	345	10	vern./painted

VB1206

Maniglia flangiata 4 curve a fissare
4 curve flanged tubular handle to fix

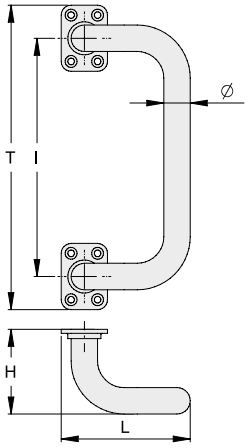

COD.	ART.	Ø	I	H	L	T		FINITURA
VB1206.020	562	20	180	64	90	230	10	zinc./galv.
VB1206.028	565	28	280	80	135	345	6	zinc./galv.
VB1206.020.V	572	20	180	64	90	230	10	vern./painted
VB1206.028.V	575	28	280	80	135	345	6	vern./painted

VB1207

Maniglia flangiata inclinata a fissare
Inclined and flanged tubular handle to fix

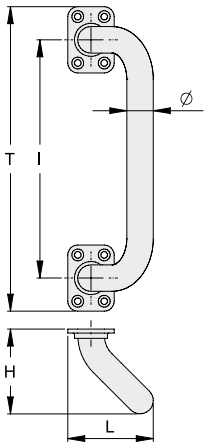

COD.	ART.	Ø	I	H	L	T		FINITURA
VB1207.020	563	20	180	64	60	230	10	zinc./galv.
VB1207.028	566	28	280	80	110	345	10	zinc./galv.
VB1207.020.V	573	20	180	64	60	230	10	vern./painted
VB1207.028.V	576	28	280	80	110	345	10	vern./painted

VB1301

Maniglia in lega speciale
Special alloy handles

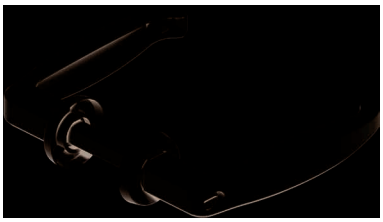

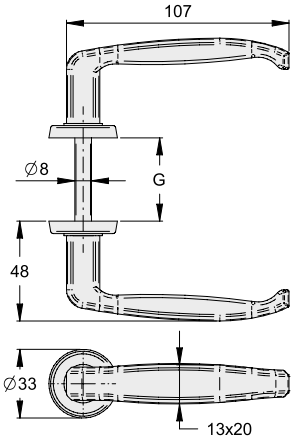

COD.	ART.	G		FINITURA
VB1301.025.V	MV/25	25-35	10	vern./painted
VB1301.035.V	MV/35	35-45	10	vern./painted
VB1301.040.V	MV/40	40-50	10	vern./painted
VB1301.050.V	MV/50	50-60	10	vern./painted
VB1301.025.C	MC/25	25-35	10	crom./chromed
VB1301.035.C	MC/35	35-45	10	crom./chromed
VB1301.040.C	MC/40	40-50	10	crom./chromed
VB1301.050.C	MC/50	50-60	10	crom./chromed

Esempio di applicazione VB1207
Example of application VB1207

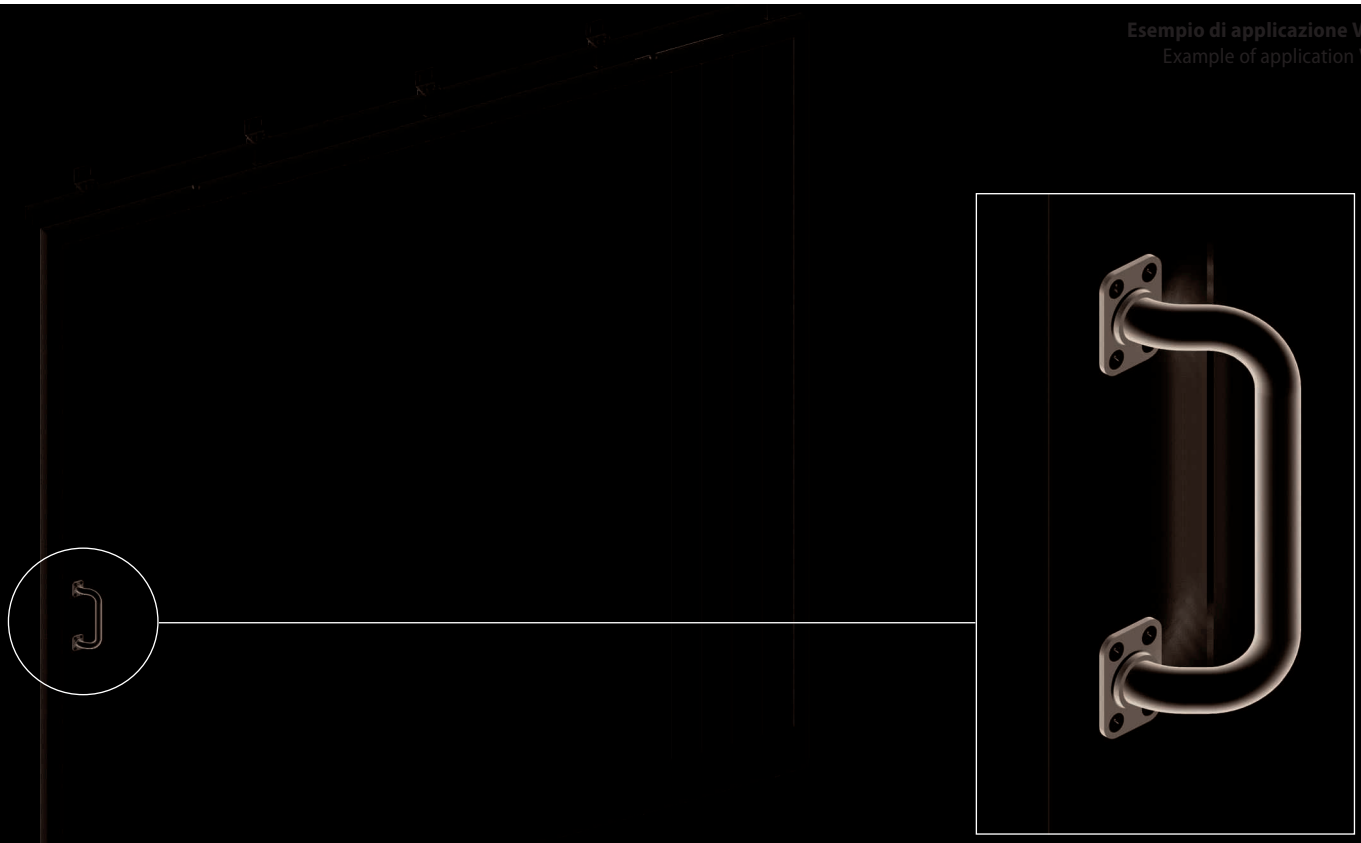

VB2103

Monorotaia per carrello scorrevole 3 m
Top track for sliding trolley 3 m

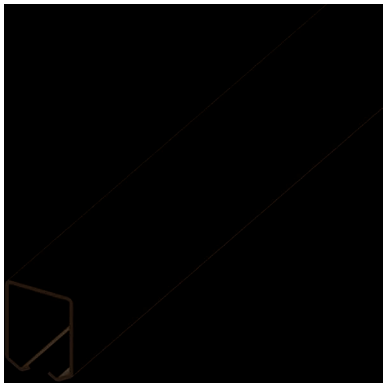

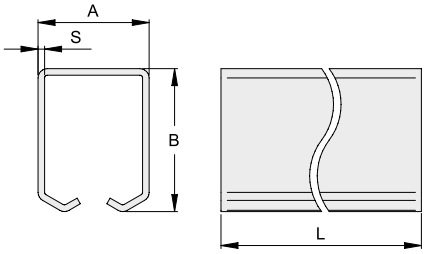

COD.	ART.	A	B	S	L(m)		FINITURA
VB2103.024	P.RF/24.3	33	31	2	3	1	zinc./galv.
VB2103.045	P.RF/45.3	42	54	2.5	3	1	zinc./galv.
VB2103.055	P.RF/55.3	57	67	3	3	1	zinc./galv.

VB2106

Monorotaia per carrello scorrevole 6 m
Top track for sliding trolley 6 m

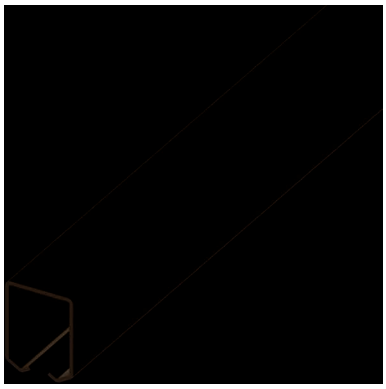

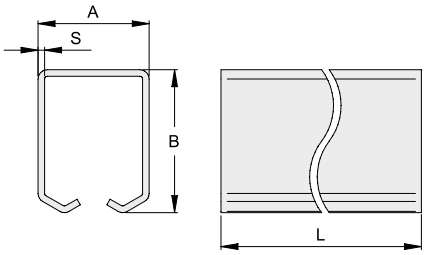

COD.	ART.	A	B	S	L(m)		FINITURA
VB2106.024	P.RF/24	33	31	2	6	1	zinc./galv.
VB2106.045	P.RF/45	42	54	2.5	6	1	zinc./galv.
VB2106.055	P.RF/55	57	67	3	6	1	zinc./galv.

VB2201

Supporto regolabile per monorotaia fissaggio a parete
Wall-fixing adjustable support bracket for top track

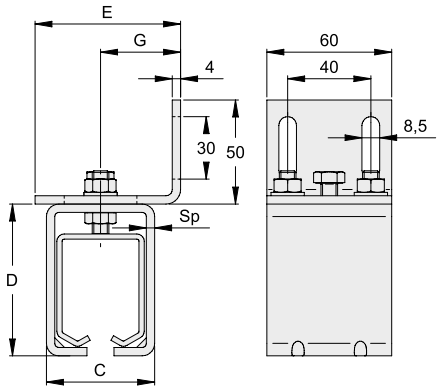

COD.	ART.	C	D	E	G	Sp		FINITURA
VB2201.024	SP24	40.5	48	59	21-41	3	10	zinc./galv.
VB2201.045	SP45	51.5	71	69	25-45	4	10	zinc./galv.
VB2201.055	SP55	65.5	86	79	35-52	4	6	zinc./galv.

VB2202

Supporto per monorotaia fissagio a soffitto
Ceiling mount support bracket for top track

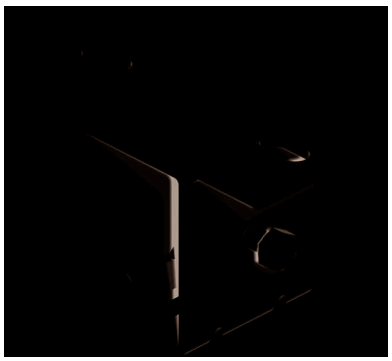

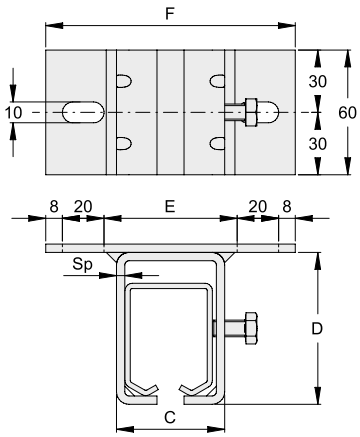

COD.	ART.	C	D	E	F	Sp		FINITURA
VB2202.024	SS24	40.5	48	54	110	3	8	zinc./galv.
VB2202.045	SS45	51.5	71	64	120	4	6	zinc./galv.
VB2202.055	SS55	65.5	86	74	130	4	4	zinc./galv.

VB3101

Carrello scorrevole 2 ruote tipo 1
2 wheels sliding trolley type 1

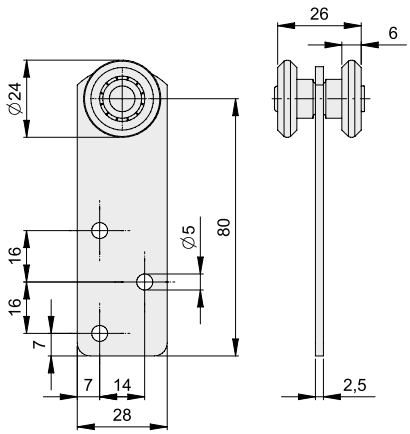

COD.	ART.	Kg		FINITURA
VB3101.024	24.1	30	20	zinc./galv.

La portata è riferita ad una coppia di carrelli
Load refers to 2 trolleys

VB3102

Carrello scorrevole 2 ruote tipo 2
2 wheels sliding trolley type 2

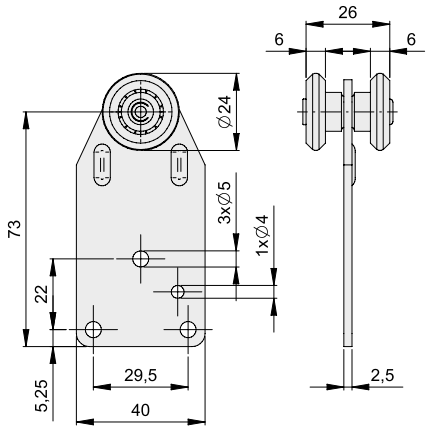

COD.	ART.	Kg		FINITURA
VB3102.024	24.2	30	20	zinc./galv.

La portata è riferita ad una coppia di carrelli
Load refers to 2 trolleys

VB3103

Carrello scorrevole 4 ruote tipo 3
4 wheels sliding trolley type 3

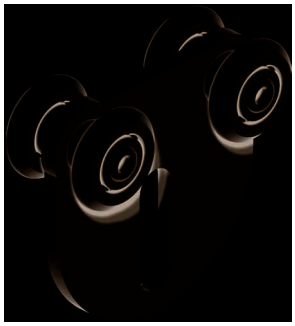

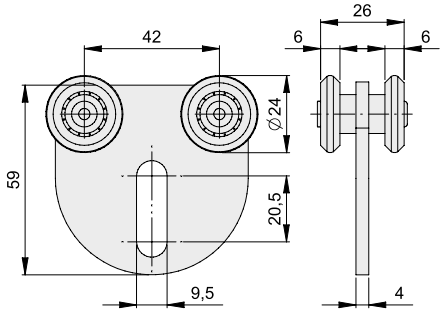

COD.	ART.	Kg		FINITURA
VB3103.024	24.3	75	20	zinc./galv.
NEW VB3103.024.I	-	75	1	inox

La portata è riferita ad una coppia di carrelli
Load refers to 2 trolleys

VB3111

Carrello scorrevole 2 ruote tipo 4
2 wheels sliding trolley type 4

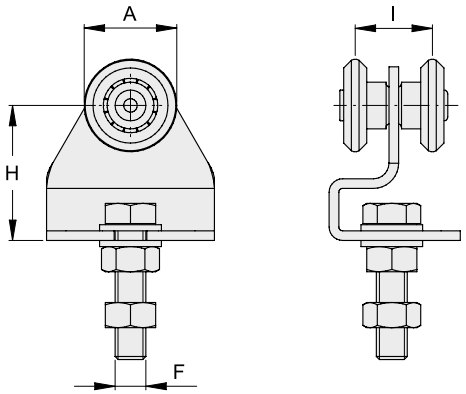

La portata è riferita ad una coppia di carrelli
Load refers to 2 trolleys

Per monorotaia P.RF/24
For top track P.RF/24

COD.	ART.	A	F	H	I	Kg		FINITURA
VB3111.024	2RS	24	M8	35	20	50	20	zinc./galv.

VB3112

Carrello scorrevole 4 ruote tipo 5
4 wheels sliding trolley tipo 5

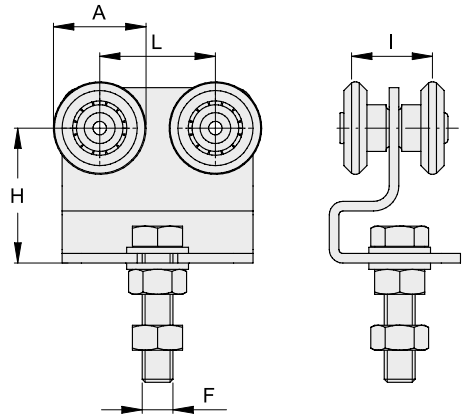

La portata è riferita ad una coppia di carrelli
Load refers to 2 trolleys

Per monorotaia P.RF/24
For top track P.RF/24

COD.	ART.	A	F	H	I	L	Kg		FINITURA
VB3112.024	4RS	24	M8	35	20	30	75	20	zinc./galv.

VB3201

Carrello scorrevole 2 ruote
2 wheels sliding trolley

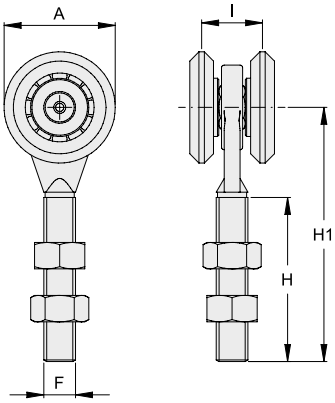

COD.	ART.	A	F	H	H1	I	Kg		FINITURA
VB3201.024	2RF/24	24	M8	30	50	20	30	20	zinc./galv.
VB3201.045	2RF/45	45	M12	60	95	23	100	20	zinc./galv.
VB3201.055	2RF/55	55	M20	80	130	30	150	8	zinc./galv.

Per utilizzo poco frequente
For not intensive use

La portata è riferita ad una coppia di carrelli
Load refers to 2 trolleys

VB3202

Carrello scorrevole 4 ruote
4 wheels sliding trolley

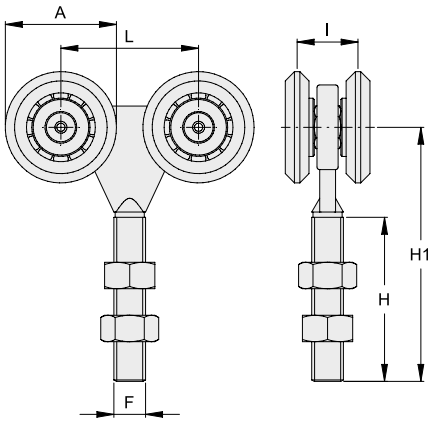

COD.	ART.	A	F	H	H1	I	L	Kg		FINITURA
VB3202.024	4RF/24	24	M8	30	50	20	30	100	20	zinc./galv.
VB3202.045	4RF/45	45	M12	60	95	23	52	400	10	zinc./galv.
VB3202.055	4RF/55	55	M20	80	130	30	60	600	4	zinc./galv.

Per utilizzo poco frequente
For not intensive use

La portata è riferita ad una coppia di carrelli
Load refers to 2 trolleys

VB3211

Carrello scorrevole 2 ruote con cuscinetto
2 wheels sliding trolley with bearing

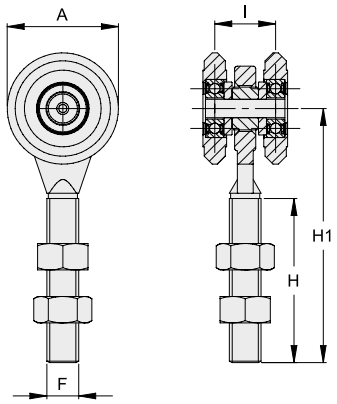

COD.	ART.	A	F	H	H1	I	Kg			FINITURA
VB3211.045	2RC/45	45	M12	60	95	23	300	2	20	zinc./galv.
VB3211.055	2RC/55	55	M20	80	130	30	550	2	8	zinc./galv.

La portata è riferita ad una coppia di carrelli
Load refers to 2 trolleys

VB3212

Carrello scorrevole 4 ruote con cuscinetto
4 wheels sliding trolley with bearing

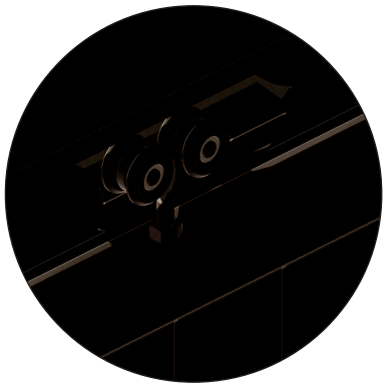

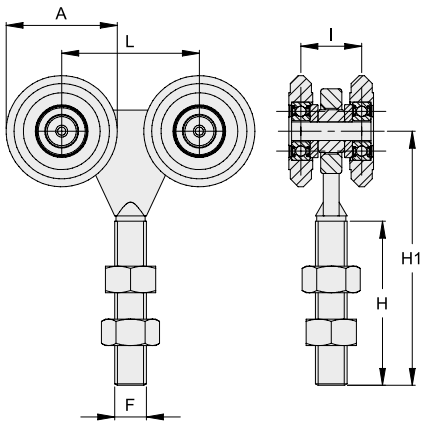

COD.	ART.	A	F	H	H1	I	L	Kg			FINITURA
VB3212.045	4RC/45	45	M12	60	95	23	52	800	2	10	zinc./galv.
VB3212.055	4RC/55	55	M20	80	130	30	60	1000	2	4	zinc./galv.

La portata è riferita ad una coppia di carrelli
Load refers to 2 trolleys

VB3901

Piastrina di fissaggio carrelli
Fixing plate for trolleys

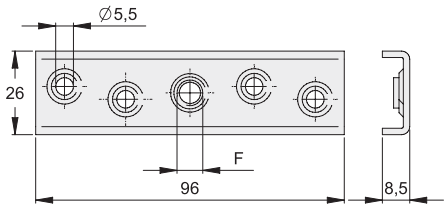

COD.	ART.	F		FINITURA
VB3901.008	PM8	M8	20	zinc./galv.

VB3902 NEW

Piastrina regolabile di fissaggio carrelli
Adjustable fixing plate for trolleys

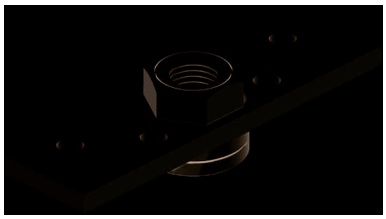

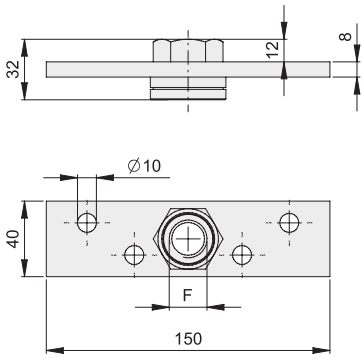

COD.	ART.	F		FINITURA
VB3902.020	PM20	M20	1	zinc./galv.

La ricetta della qualità

The quality recipe

Gli ingredienti di un cancello perfetto

The perfect gate recipe

In un progetto complesso, alcuni elementi fanno la differenza.
Ingredienti di qualità, come in un segreto da tramandare, danno un tocco inconfondibile ad ogni realizzazione. FAC racconta una storia di passione per la componentistica meccanica e di ricerca della perfezione. Ogni accessorio per cancelli e portoni è progettato per diventare il punto di forza su cui il progetto del cliente può fare affidamento nel tempo. Una storia di evoluzione continua, dal 1973.

As in a good recipe, the FAC accessory is the secret ingredient to manufacture a perfect gate: in a complex project even the littlest element makes the difference. The FAC product is *that something* that makes the difference in terms of functional quality, but at the same time it remains invisible, leading to the perfect gate. FAC shares its secret only to a selected hardware stores and blacksmiths, that in turn will allow the privileged to accomplish the perfect gate.
Quality is a tradition in FAC, it is "the secret" that has been handed down since 1973.

FAC®
GATE ACCESSORIES

ACCESSORI PER CANCELLI AD ANTA

Accessories for swing gates

Tutte le misure sono espresse in mm dove non diversamente specificato.
All measurements are in mm unless otherwise specified.

Esempi di applicazione
Examples of application

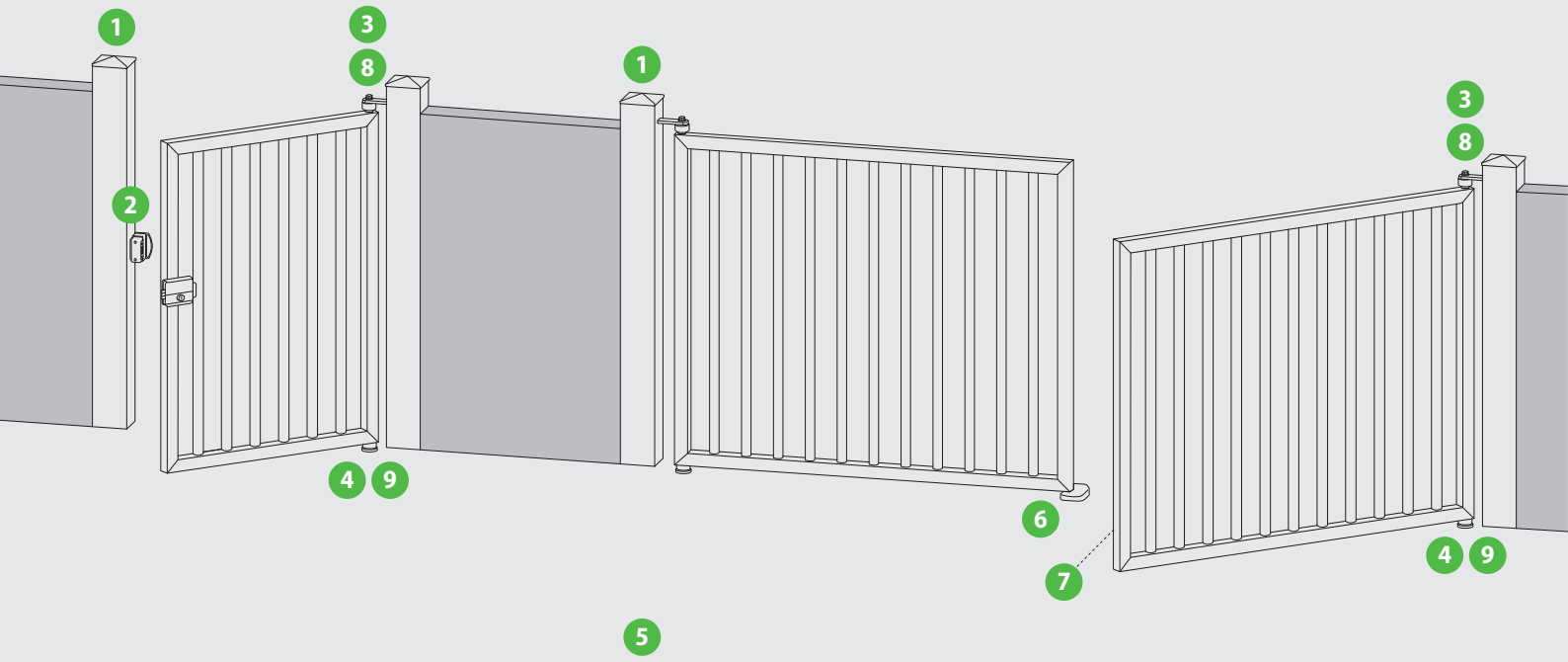

1. Copricolonna / Caps

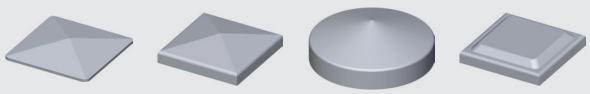

VL2100 VL2101 VL2103 VL2104

2. Battenti e incontri / Strikes

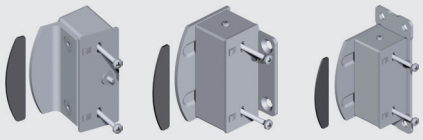

VC5200 VC5202 VC5211

3. Cardini superiori / Top hinges

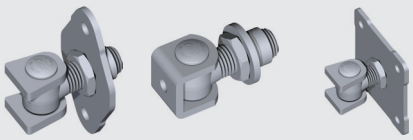

VC1109 VC1204 VC1105

4. Cardini inferiori / Bottom hinges

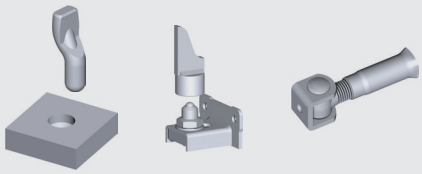

VC2201+VC2101 VC2204 VC1202

5. Battente con piastra / Limit stop with plate

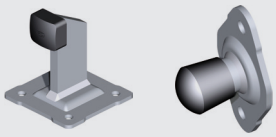

VA4102 VC 5301

6. Battenti / Centre stops

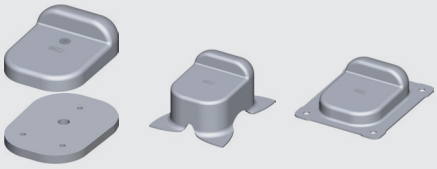

VC5103+VC5123 VC5101 VC5102

7. Catenacci / Bolts

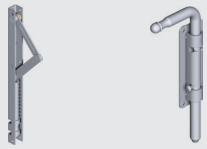

VL0201 VL0302

8. Cardini superiori / Top hinges

VC4113 VC4101 VC3301

9. Cardini inferiori / Bottom hinges

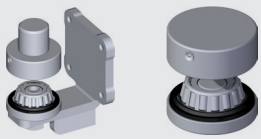

VC4213 VC4202

VC1101

Cardine a saldare
Hinge to weld

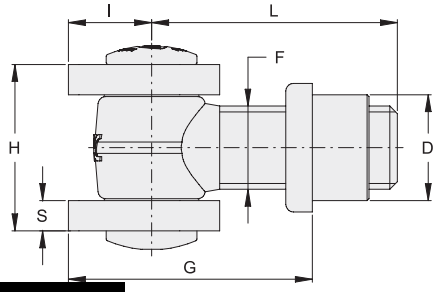

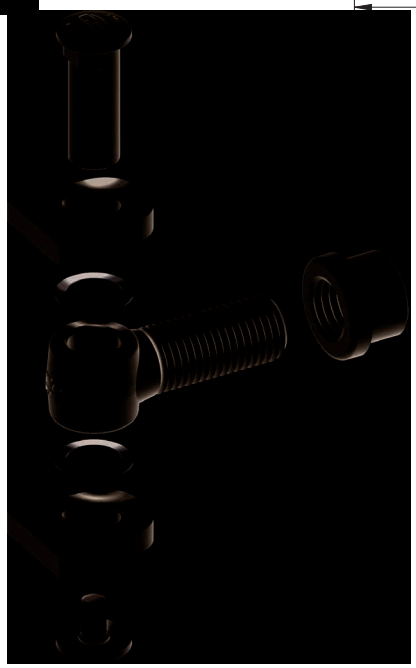

COD.	ART.	F	H	S	I	L	G	D		FINITURA
VC1101.A18	432	M18	40	6	19	55	42-68	23	20	zinc./galv.
VC1101.A20	432.20	M20	40	6	19	60	46-72	25	20	zinc./galv.
VC1101.A22	435	M22	45	8	23	65	49-80	28	12	zinc./galv.
VC1101.A24	432.24	M24	51	8	23	70	50-81	29	10	zinc./galv.
VC1101.A27	436	M27	56	8	25	80	59-94	35	6	zinc./galv.
VC1101.A18.I	1432	M18	38	5	19	55	42-68	23	10	inox
VC1101.A22.I	1435	M22	41	6	23	65	49-80	28	10	inox
VC1101.A27.I	1436	M27	56	8	25	76	70-94	35	6	inox

VC1102

Cardine a muro
Masonry hinge

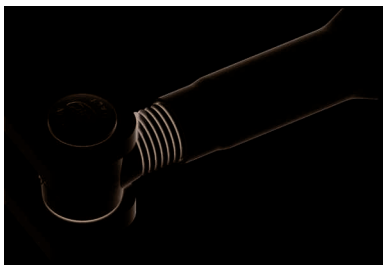

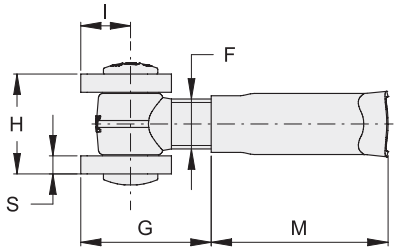

COD.	ART.	F	H	S	I	G	M		FINITURA
VC1102.A18	431	M18	40	6	19	38-61	68	14	zinc./galv.
VC1102.A20	431.20	M20	40	6	19	41-65	94	10	zinc./galv.
VC1102.A22	434	M22	45	8	23	43-72	77	10	zinc./galv.
VC1102.A24	431.24	M24	51	8	23	48-72	105	8	zinc./galv.
VC1102.A27	437	M27	56	8	25	51-84	90	6	zinc./galv.
VC1102.A18.I	1431	M18	38	5	19	38-61	68	10	inox
VC1102.A22.I	1434	M22	41	6	23	43-72	77	10	inox

VC1103

Cardine a barra lunga
Long rod hinge

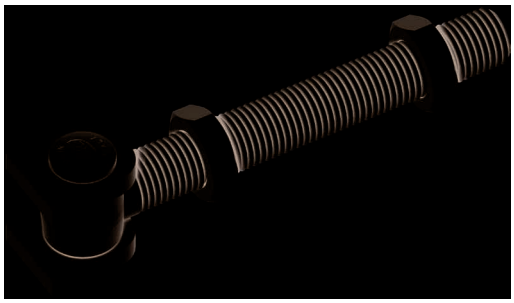

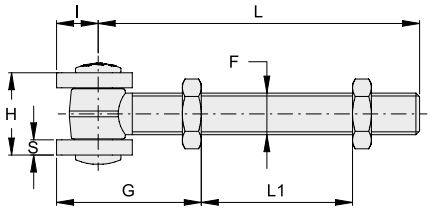

COD.	ART.	F	H	S	I	L	G	L1		FINITURA
VC1103.D18	430	M18	40	6	19	155	min. 45	max. 120	10	zinc./galv.
VC1103.D20	430.20	M20	40	6	19	160	min. 49	max. 120	10	zinc./galv.
VC1103.D22	433	M22	45	8	23	170	min. 51	max. 130	6	zinc./galv.
VC1103.D24	430.24	M24	51	8	23	180	min. 53	max. 140	6	zinc./galv.
VC1103.D18.I	1430	M18	38	5	19	155	min 51	max 110	10	inox
VC1103.D22.I	1433	M22	41	6	23	170	min 60	max 115	6	inox

VC1104

Cardine a saldare regolabile
Adjustable hinge to weld

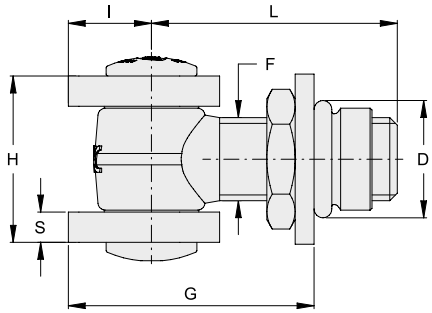

COD.	ART.	F	H	S	I	L	G	D		FINITURA
VC1104.A18	230.18	M18	40	6	19	55	49-63	28	20	zinc./galv.
VC1104.A20	230.20	M20	40	6	19	60	53-67	30	10	zinc./galv.
VC1104.A22	230.22	M22	45	8	23	65	55-75	31	12	zinc./galv.
VC1104.A24	230.24	M24	51	8	23	70	60-78	35	6	zinc./galv.
VC1104.A27	230.27	M27	56	8	25	80	68-86	40	6	zinc./galv.

VC1105

Cardine regolabile con piastra a 4 fori a fissare
Adjustable hinge with 4 holes plate to fix

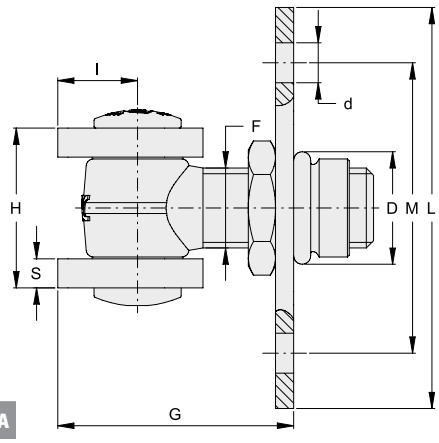

COD.	ART.	F	H	S	I	G	D	d	L	M		FINITURA
VC1105.A18	231.18	M18	40	6	19	49-63	28	9	90x90	64x64	8	zinc./galv.
VC1105.A20	231.20	M20	40	6	19	53-67	30	9	90x90	64x64	8	zinc./galv.
VC1105.A22	231.22	M22	45	8	23	55-75	31	11	110x110	80x80	6	zinc./galv.
VC1105.A24	231.24	M24	51	8	23	60-78	35	11	110x110	80x80	6	zinc./galv.
VC1105.A27	231.27	M27	56	8	25	68-86	40	13	130x130	90x90	6	zinc./galv.

VC1106

Cardine regolabile con piastra a 4 fori imbutita a fissare (brevettato)
Adjustable hinge with deep-drawn 4 holes plate to fix (patented)

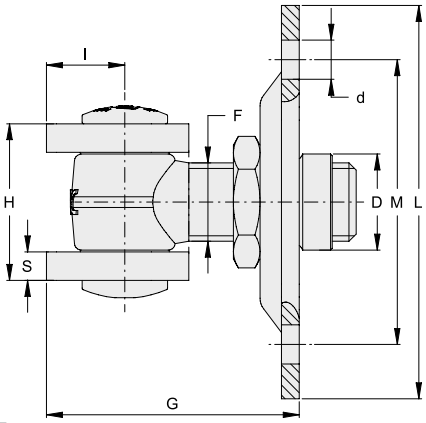

COD.	ART.	F	H	S	I	G	D	d	L	M		FINITURA
VC1106.A18	231B.18	M18	40	6	19	55-69	22	9	90x90	64x64	8	zinc./galv.
VC1106.A20	231B.20	M20	40	6	19	59-73	24	9	90x90	64x64	8	zinc./galv.
VC1106.A22	231B.22	M22	45	8	23	61-81	27	11	110x110	80x80	6	zinc./galv.
VC1106.A24	231B.24	M24	51	8	23	66-84	30	11	110x110	80x80	6	zinc./galv.
VC1106.A27	231B.27	M27	56	8	25	75-94	33	13	130x130	90x90	6	zinc./galv.

VC1107

Cardine con piastra a 4 fori a fissare
Hinge with 4 holes plate to fix

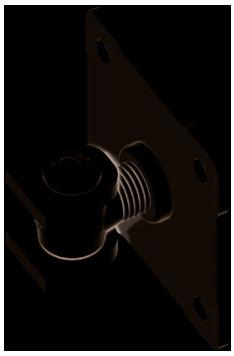

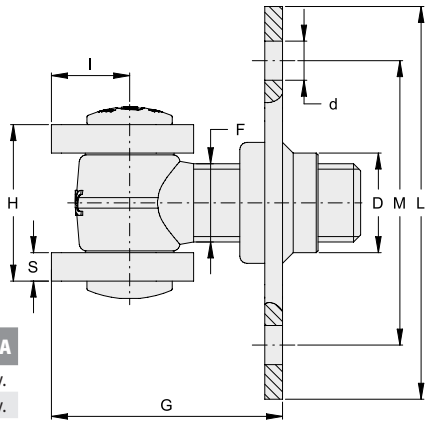

COD.	ART.	F	H	S	I	G	D	d	L	M		FINITURA
VC1107.A18	232.18	M18	40	6	19	46-63	23	9	90x90	64x64	8	zinc./galv.
VC1107.A20	232.20	M20	40	6	19	50-67	25	9	90x90	64x64	8	zinc./galv.
VC1107.A22	232.22	M22	45	8	23	55-75	28	11	110x110	80x80	6	zinc./galv.
VC1107.A24	232.24	M24	51	8	23	60-78	29	11	110x110	80x80	6	zinc./galv.
VC1107.A27	232.27	M27	56	8	25	66-86	35	13	130x130	90x90	6	zinc./galv.
NEW **VC1107.A18.I**	1232.18	M18	38	5	19	46-63	33	9	90x90	64x64	8	inox
NEW **VC1107.A22.I**	1232.22	M22	41	6	23	55-75	38	11	110x110	80x80	6	inox
NEW **VC1107.A27.I**	1232.27	M27	56	8	30	74-90	45	13	130x130	90x90	6	inox

VC1108

Cardine con piastra a 4 fori imbutita a fissare
Hinge with deep-drawn 4 holes plate to fix

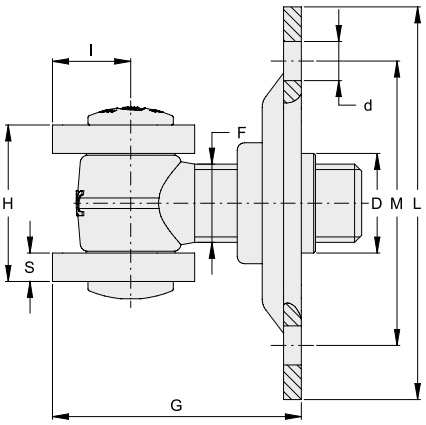

COD.	ART.	F	H	S	I	G	D	d	L	M		FINITURA
VC1108.A18	232B.18	M18	40	6	19	52-69	23	9	90x90	64x64	8	zinc./galv.
VC1108.A20	232B.20	M20	40	6	19	56-73	25	9	90x90	64x64	8	zinc./galv.
VC1108.A22	232B.22	M22	45	8	23	61-81	28	11	110x110	80x80	6	zinc./galv.
VC1108.A24	232B.24	M24	51	8	23	66-84	29	11	110x110	80x80	6	zinc./galv.
VC1108.A27	232B.27	M27	56	8	25	73-94	35	13	130x130	90x90	6	zinc./galv.
NEW **VC1108.A18.I**	1232B.18	M18	38	5	19	52-69	23	9	90x90	64x64	8	inox
NEW **VC1108.A22.I**	1232B.22	M22	41	6	23	61-81	28	11	110x110	80x80	6	inox
NEW **VC1108.A27.I**	1232B.27	M27	56	8	25	73-94	35	13	130x130	90x90	6	inox

VC1109

Cardine regolabile con piastrina a 2 fori a fissare
Adjustable hinge with 2 holes plate to fix

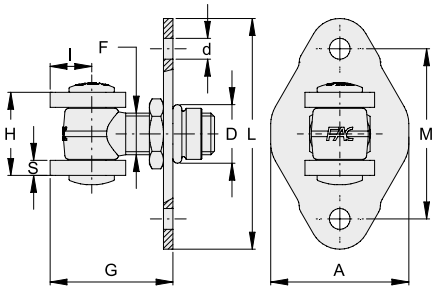

COD.	ART.	F	H	S	I	G	D	d	L	A	M		FINITURA
VC1109.A18	131.18	M18	40	6	19	49-63	28	9	100	60	74	8	zinc./galv.
VC1109.A20	131.20	M20	40	6	19	53-67	30	9	100	60	74	8	zinc./galv.
VC1109.A22	131.22	M22	45	8	23	55-75	31	11	122	73	90	6	zinc./galv.
VC1109.A24	131.24	M24	51	8	23	60-78	35	11	122	73	90	6	zinc./galv.

VC1110

Cardine con piastrina a 2 fori a fissare
Hinge with 2 holes plate to fix

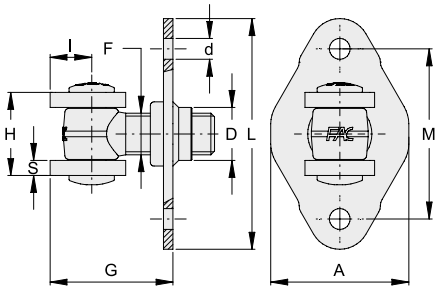

COD.	ART.	F	H	S	I	G	D	d	L	A	M		FINITURA
VC1110.A18	132.18	M18	40	6	19	46-63	23	9	100	60	74	8	zinc./galv.
VC1110.A20	132.20	M20	40	6	19	50-67	25	9	100	60	74	8	zinc./galv.
VC1110.A22	132.22	M22	45	8	23	55-75	28	11	122	73	90	6	zinc./galv.
VC1110.A24	132.24	M24	51	8	23	60-78	29	11	122	73	90	6	zinc./galv.
NEW VC1110.A18.I	1132.18	M18	38	5	19	46-63	23	9	100	60	74	8	inox
NEW VC1110.A22.I	1132.22	M22	41	6	23	55-75	28	11	122	73	90	6	inox

VC1111 NEW

Cardine regolabile con piastrina a 2 fori imbutita a fissare
Adjustable hinge with deep-drawn 2 holes plate to fix

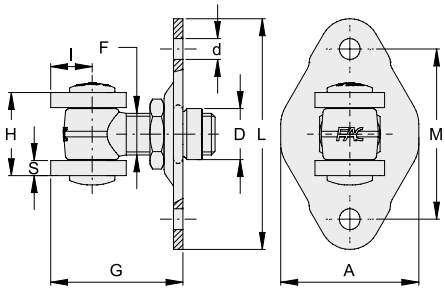

COD.	ART.	F	H	S	I	G	D	d	L	A	M		FINITURA
VC1111.A18	131B.18	M18	40	6	19	53-67	22	9	100	60	74	8	zinc./galv.
VC1111.A20	131B.20	M20	40	6	19	57-71	24	9	100	60	74	8	zinc./galv.
VC1111.A22	131B.22	M22	45	8	23	60-80	27	11	122	73	90	6	zinc./galv.
VC1111.A24	131B.24	M24	51	8	23	65-83	30	11	122	73	90	6	zinc./galv.

VC1112 NEW

Cardine con piastrina a 2 fori imbutita a fissare
Hinge with deep-drawn 2 holes plate to fix

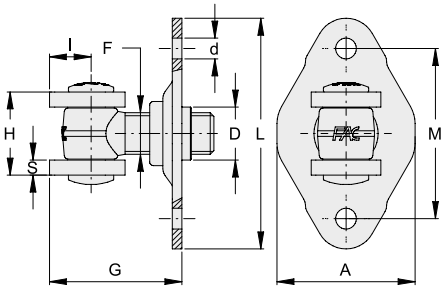

COD.	ART.	F	H	S	I	G	D	d	L	A	M		FINITURA
VC1112.A18	132B.18	M18	40	6	19	50-67	23	9	100	60	74	8	zinc./galv.
VC1112.A20	132B.20	M20	40	6	19	54-71	25	9	100	60	74	8	zinc./galv.
VC1112.A22	132B.22	M22	45	8	23	60-80	28	11	122	73	90	6	zinc./galv.
VC1112.A24	132B.24	M24	51	8	23	65-83	29	11	122	73	90	6	zinc./galv.

VC1120 NEW

Cardine a fissaggio rapido
Fast fixing hinge

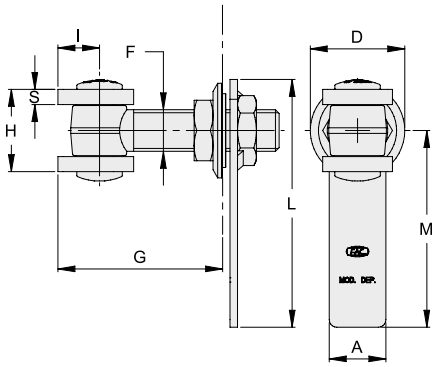

COD.	ART.	F	H	S	I	L	M	A	G	D	FORO COLONNA COLUMN HOLE		FINITURA
VC1120.B18	432F	M18	40	6	19	127	104	30	51-74	45	35	8	zinc./galv.
VC1120.B20	432F.20	M20	40	6	19	131	104	30	55-79	50	40	6	zinc./galv.
VC1120.B22	435F	M22	45	8	23	131	104	30	57-87	50	40	6	zinc./galv.

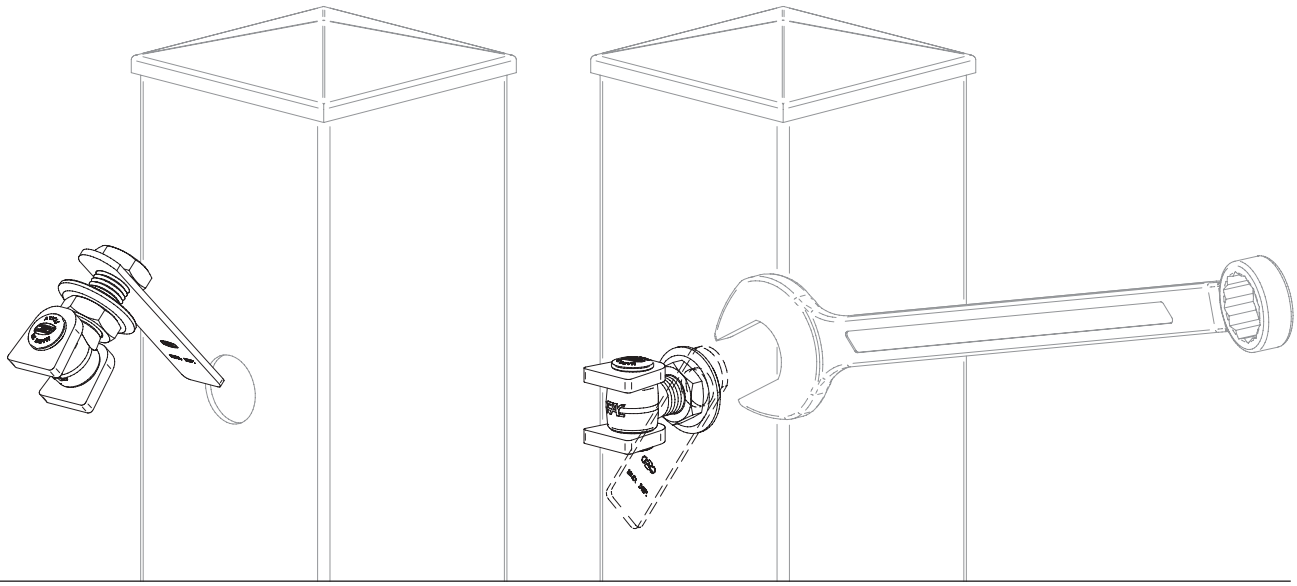

VC1201

Cardine con cavallotto a saldare
Hinge with bracket to weld

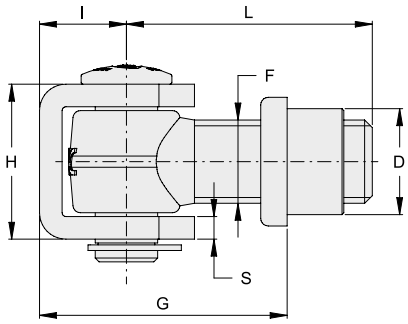

COD.	ART.	F	H	S	G	I	L	D		FINITURA
VC1201.A18	432C	M18	39	6	43-69	21	55	23	20	zinc./galv.
VC1201.A20	432C.20	M20	39	6	47-73	21	60	25	20	zinc./galv.
VC1201.A22	435C	M22	41	6	50-81	23	65	28	12	zinc./galv.
VC1201.A24	432C.24	M24	47	6	53-84	25	70	29	10	zinc./galv.
VC1201.A27	436C	M27	57	8	67-102	35	76	35	6	zinc./galv.
VC1201.A18.I	1432C	M18	37	5	42-68	19	55	23	10	inox
VC1201.A22.I	1435C	M22	39	5	49-80	22	65	28	10	inox

VC1202

Cardine con cavallotto a muro
Masonry hinge with bracket

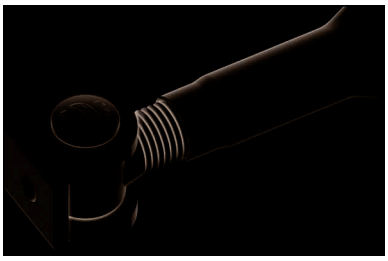

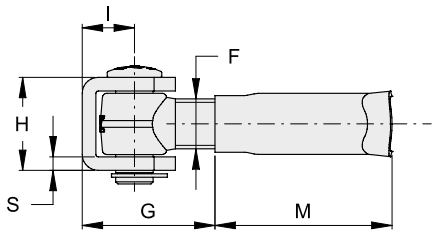

COD.	ART.	F	H	S	I	G	M		FINITURA
VC1202.A18	431C	M18	39	6	21	39-62	66	14	zinc./galv.
VC1202.A20	431C.20	M20	39	6	21	42-66	94	10	zinc./galv.
VC1202.A22	434C	M22	41	6	23	44-73	77	10	zinc./galv.
VC1202.A24	431C.24	M24	47	6	25	51-75	105	8	zinc./galv.
VC1202.A27	437C	M27	57	8	35	58-91	90	6	zinc./galv.
VC1202.A18.I	1431C	M18	37	5	19	38-61	66	10	inox
VC1202.A22.I	1434C	M22	39	5	22	43-72	77	10	inox

VC1203

Cardine a barra lunga con cavallotto
Long rod hinge with bracket

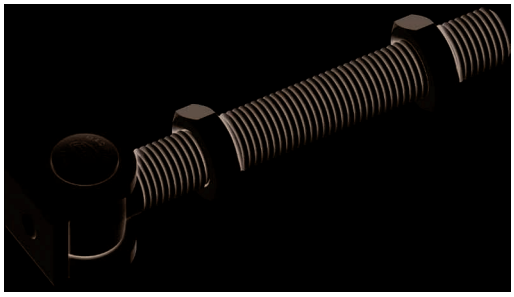

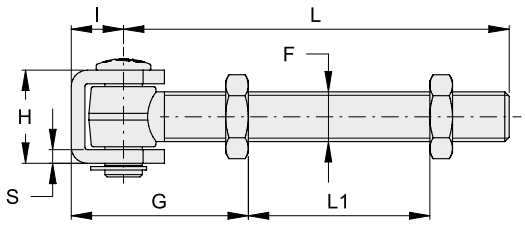

COD.	ART.	F	H	S	G	I	L	L1		FINITURA
VC1203.D18	430C	M18	39	6	min. 46	21	156	max. 120	10	zinc./galv.
VC1203.D20	430C.20	M20	39	6	min. 50	21	160	max. 130	10	zinc./galv.
VC1203.D22	433C	M22	41	6	min. 53	23	170	max. 130	6	zinc./galv.
VC1203.D24	430C.24	M24	47	6	min. 56	25	180	max. 140	6	zinc./galv.
VC1203.D18.I	1430C	M18	37	5	min. 51	19	155	max. 110	10	inox
VC1203.D22.I	1433C	M22	39	5	min. 60	22	170	max. 115	6	inox

VC1204

Cardine regolabile con cavallotto a saldare
Adjustable hinge with bracket to weld

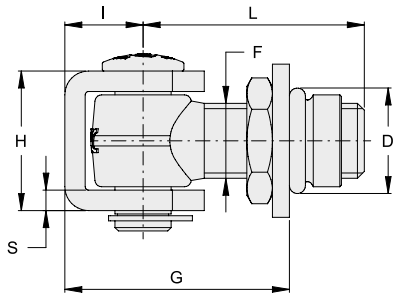

COD.	ART.	F	H	S	I	G	D	L		FINITURA
VC1204.A18	230.18C	M18	39	6	21	50-64	28	55	10	zinc./galv.
VC1204.A20	230.20C	M20	39	6	21	54-68	30	60	10	zinc./galv.
VC1204.A22	230.22C	M22	41	6	23	56-76	31	65	12	zinc./galv.
VC1204.A24	230.24C	M24	47	6	25	63-81	35	70	6	zinc./galv.
VC1204.A27	230.27C	M27	57	8	35	76-94	40	76	6	zinc./galv.

VC1205

Cardine regolabile con piastra a 4 fori e cavallotto a fissare
Adjustable hinge with 4 holes plate and bracket to fix

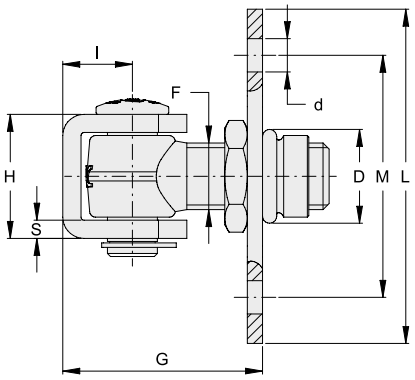

COD.	ART.	F	H	S	I	G	D	d	L	M		FINITURA
VC1205.A18	231.18C	M18	39	6	21	50-64	28	9	90x90	64x64	8	zinc./galv.
VC1205.A20	231.20C	M20	39	6	21	54-68	30	9	90x90	64x64	8	zinc./galv.
VC1205.A22	231.22C	M22	41	6	23	56-76	31	11	110x110	80x80	6	zinc./galv.
VC1205.A24	231.24C	M24	47	6	25	63-81	35	11	110x110	80x80	6	zinc./galv.
VC1205.A27	231.27C	M27	57	8	35	76-94	40	13	130x130	90x90	6	zinc./galv.

VC1206

Cardine regolabile con piastra a 4 fori imbutita e cavallotto a fissare (brevettato)
Adjustable hinge with deep-drawn 4 holes plate and bracket to fix (patented)

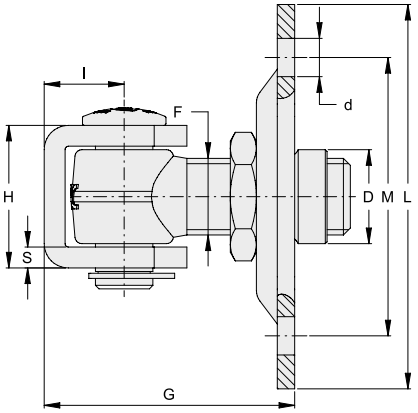

COD.	ART.	F	H	S	I	G	D	d	L	M		FINITURA
VC1206.A18	231B.18C	M18	39	6	21	56-70	22	9	90x90	64x64	8	zinc./galv.
VC1206.A20	231B.20C	M20	39	6	21	90-74	24	9	90x90	64x64	8	zinc./galv.
VC1206.A22	231B.22C	M22	41	6	23	62-82	27	11	110x110	80x80	6	zinc./galv.
VC1206.A24	231B.24C	M24	47	6	25	59-87	30	11	110x110	80x80	6	zinc./galv.
VC1206.A27	231B.27C	M27	57	8	35	83-102	33	13	130x130	90x90	6	zinc./galv.

VC1207

Cardine con piastra a 4 fori e cavallotto a fissare
Hinge with 4 holes plate and bracket to fix

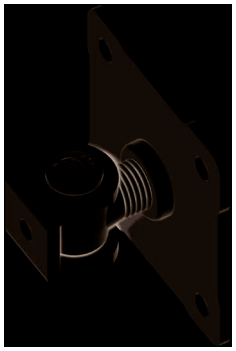

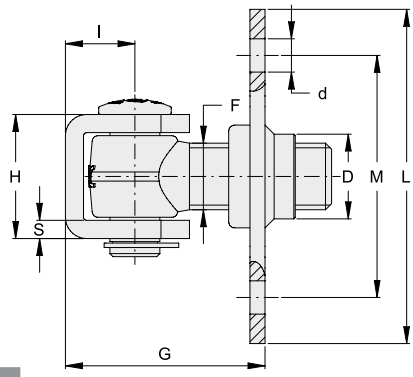

COD.	ART.	F	H	S	I	G	D	d	L	M		FINITURA
VC1207.A18	232.18C	M18	40	6	21	47-64	23	9	90x90	64x64	8	zinc./galv.
VC1207.A20	232.20C	M20	40	6	21	51-68	25	9	90x90	64x64	8	zinc./galv.
VC1207.A22	232.22C	M22	45	8	23	56-76	28	11	110x110	80x80	6	zinc./galv.
VC1207.A24	232.24C	M24	51	8	25	63-81	29	11	110x110	80x80	6	zinc./galv.
VC1207.A27	232.27C	M27	57	8	35	74-94	35	13	130x130	90x90	6	zinc./galv.
NEW VC1207.A18.I	1232.18C	M18	37	5	19	46-63	23	9	90x90	64x64	8	inox
NEW VC1207.A22.I	1232.22C	M22	39	5	22	55-75	28	11	110x110	80x80	6	inox

VC1208

Cardine con piastra a 4 fori imbutita e cavallotto a fissare
Hinge with deep-drawn 4 holes plate and bracket to fix

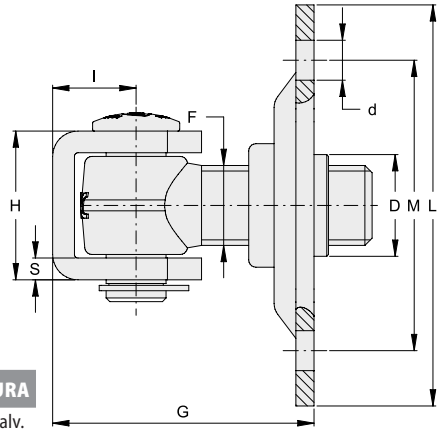

COD.	ART.	F	H	S	I	G	D	d	L	M		FINITURA
VC1208.A18	232B.18C	M18	39	6	21	53-70	23	9	90x90	64x64	8	zinc./galv.
VC1208.A20	232B.20C	M20	39	6	21	57-74	25	9	90x90	64x64	8	zinc./galv.
VC1208.A22	232B.22C	M22	41	6	23	62-82	28	11	110x110	80x80	6	zinc./galv.
VC1208.A24	232B.24C	M24	47	6	25	69-87	29	11	110x110	80x80	6	zinc./galv.
VC1208.A27	232B.27C	M27	57	8	35	81-102	35	13	130x130	90x90	6	zinc./galv.
NEW VC1208.A18.I	1232B.18C	M18	37	5	19	52-69	23	9	90x90	64x64	8	inox
NEW VC1208.A22.I	1232B.22C	M22	39	5	23	61-81	28	11	110x110	80x80	6	inox

VC1209

Cardine regolabile con piastrina a 2 fori e cavallotto a fissare
Adjustable hinge with 2 holes plate and bracket to fix

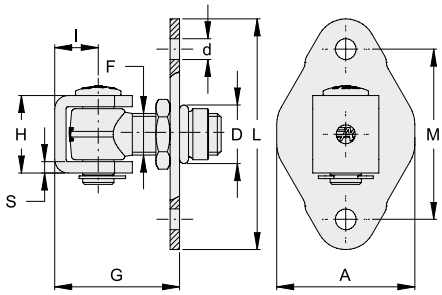

COD.	ART.	F	H	S	I	G	D	d	L	A	M		FINITURA
VC1209.A18	131.18C	M18	39	6	21	50-64	28	9	100	60	74	8	zinc./galv.
VC1209.A20	131.20C	M20	39	6	21	54-68	30	9	100	60	74	8	zinc./galv.
VC1209.A22	131.22C	M22	41	6	23	56-76	31	11	122	73	90	6	zinc./galv.
VC1209.A24	131.24C	M24	47	6	25	63-81	35	11	122	73	90	6	zinc./galv.

VC1210

Cardine con piastrina a 2 fori e cavallotto a fissare
Hinge with 2 holes plate and bracket to fix

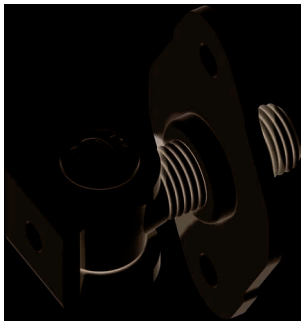

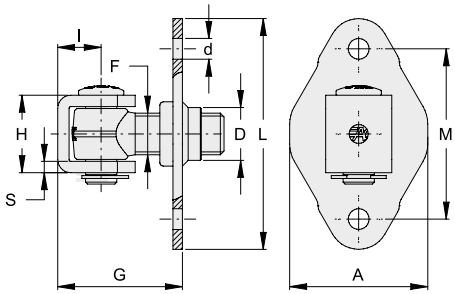

COD.	ART.	F	H	S	I	G	D	d	L	A	M		FINITURA
VC1210.A18	132.18C	M18	39	6	19	47-64	23	9	100	60	74	8	zinc./galv.
VC1210.A20	132.20C	M20	39	6	19	51-68	25	9	100	60	74	8	zinc./galv.
VC1210.A22	132.22C	M22	41	6	23	56-76	28	11	122	73	90	6	zinc./galv.
VC1210.A24	132.24C	M24	47	6	25	63-81	29	11	122	73	90	6	zinc./galv.
NEW VC1210.A18.I	1132.18C	M18	37	5	19	46-63	23	9	100	60	74	8	inox
NEW VC1210.A22.I	1132.22C	M22	39	5	22	55-75	28	11	122	73	90	6	inox

VC1211 NEW

Cardine con cavallotto regolabile con piastrina a 2 fori imbutita a fissare
Adjustable hinge with bracket with 2 holes deep-drawn plate to fix

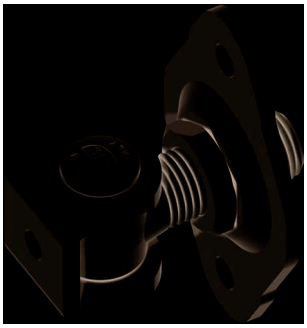

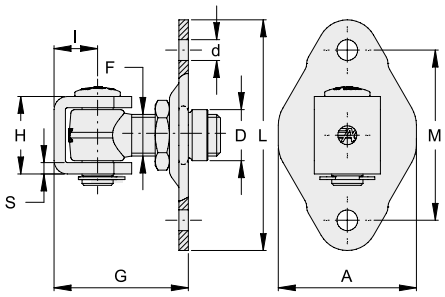

COD.	ART.	F	H	S	I	G	D	d	L	A	M		FINITURA
VC1211.A18	131B.18C	M18	39	6	21	54-68	22	9	100	60	74	8	zinc./galv.
VC1211.A20	131B.20C	M20	39	6	21	58-72	24	9	100	60	74	8	zinc./galv.
VC1211.A22	131B.22C	M22	41	6	23	61-81	27	11	122	73	90	6	zinc./galv.
VC1211.A24	131B.24C	M24	47	6	25	68-86	30	11	122	73	90	6	zinc./galv.

VC1212 NEW

Cardine con cavallotto e piastrina a 2 fori imbutita a fissare
Hinge with bracket and 2 holes deep-drawn plate to fix

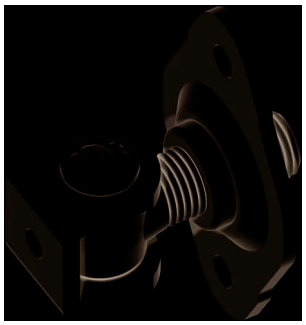

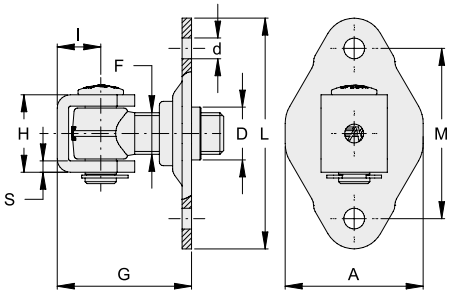

COD.	ART.	F	H	S	I	G	D	d	L	A	M		FINITURA
VC1212.A18	132B.18C	M18	39	6	21	51-68	23	9	100	60	74	8	zinc./galv.
VC1212.A20	132B.20C	M20	39	6	21	55-72	25	9	100	60	74	8	zinc./galv.
VC1212.A22	132B.22C	M22	41	6	23	61-81	28	11	122	73	90	6	zinc./galv.
VC1212.A24	132B.24C	M24	47	6	25	68-86	29	11	122	73	90	6	zinc./galv.

VC1213

Cardine con cavallotto saldato su piastra a 4 fori imbutita a fissare
Hinge with welded bracket on a 4 holes deep-drawn plate to fix

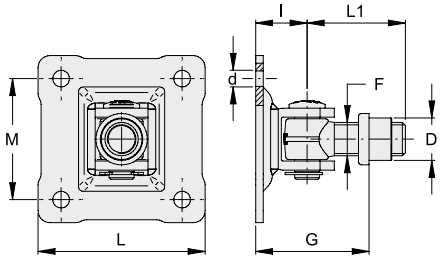

COD.	ART.	F	G	D	d	I	L1	L	M		FINITURA
VC1213.A18	233.18C	M18	47-73	23	9	30	55	90x90	64x64	8	zinc./galv.
VC1213.A22	233.22C	M22	55-86	28	11	34	65	110x110	80x80	4	zinc./galv.
VC1213.A27	233.27C	M27	72-107	35	13	46	76	130x130	90x90	4	zinc./galv.

VC1214

Cardine regolabile con cavallotto saldato su piastrina a 2 fori a fissare
Adjustable hinge with welded bracket on a 2 holes plate to fix

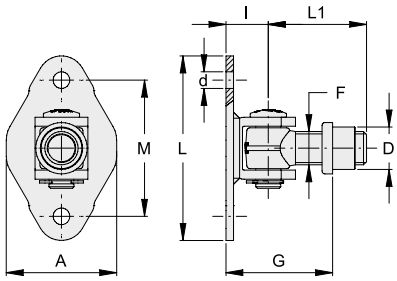

COD.	ART.	F	G	D	d	I	L1	L	A	M		FINITURA
VC1214.A18	133.18C	M18	47-73	23	9	23	55	100	60	74	8	zinc./galv.
VC1214.A20	133.20C	M20	51-77	25	9	25	55	100	60	74	8	zinc./galv.
VC1214.A22	133.22C	M22	55-86	28	11	28	65	122	73	90	4	zinc./galv.
VC1214.A24	133.24C	M24	56-87	29	11	30	65	112	73	90	4	zinc./galv.

VC1220 NEW

Cardine con cavallotto a fissaggio rapido
Fast fixing hinge with bracket

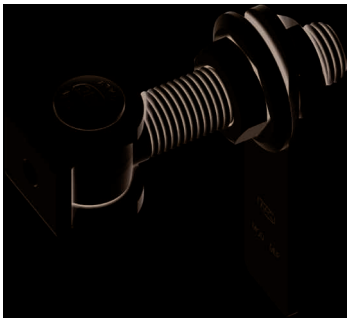

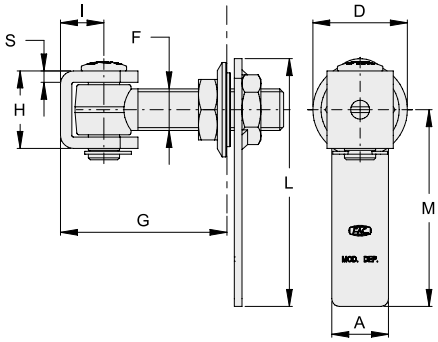

COD.	ART.	F	H	S	I	L	M	A	G	D	FORO COLONNA COLUMN HOLE		FINITURA
VC1220.B18	432FC	M18	39	6	21	127	104	30	52-75	45	35	8	zinc./galv.
VC1220.B20	432FC.20	M20	39	6	21	131	104	30	56-80	50	40	6	zinc./galv.
VC1220.B22	435FC	M22	41	6	23	131	104	30	58-88	50	40	6	zinc./galv.

vedi pagina 83
see page 83

VC1301

Cardine a fascia a saldare
Wrap-around hinge to weld

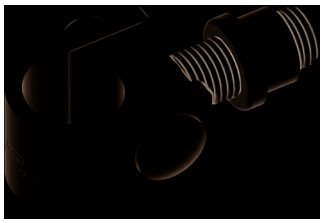

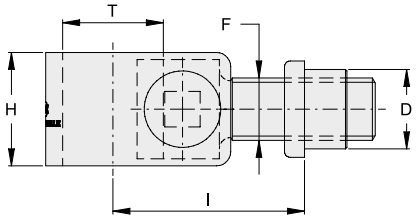

COD.	ART.	F	H	T	I	D		FINITURA
VC1301.A18	243.18	M18	35	30	43-75	23	10	zinc./galv.
VC1301.A22	243.22	M22	40	35	48-87	28	6	zinc./galv.
VC1301.A27	243.27	M27	45	40	55-107	35	4	zinc./galv.

VC1302 NEW

Cardine a fascia da muro
Wrap-around masonry hinge

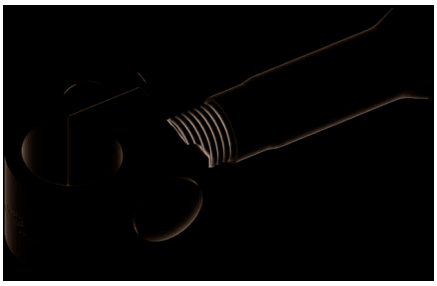

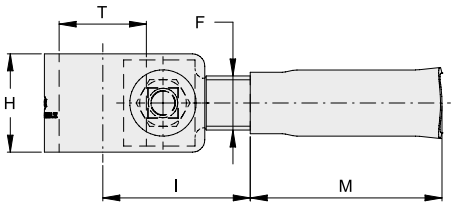

COD.	ART.	F	H	T	I	M		FINITURA
VC1302.A18	243M.18	M18	35	30	39-66	68	10	zinc./galv.
VC1302.A22	243M.22	M22	40	35	45-75	77	6	zinc./galv.
VC1302.A27	243M.27	M27	45	40	55-95	90	4	zinc./galv.

VC1304

Cardine a fascia regolabile a saldare
Adjustable wrap-around hinge to weld

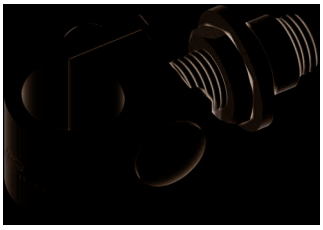

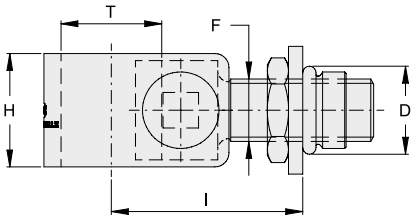

COD.	ART.	F	H	T	I	D		FINITURA
VC1304.A18	240.18	M18	35	30	50-70	28	10	zinc./galv.
VC1304.A22	240.22	M22	40	35	55-80	31	6	zinc./galv.
VC1304.A27	240.27	M27	45	40	65-85	40	4	zinc./galv.

VC1305

Cardine a fascia regolabile con piastra a 4 fori da fissare
Adjustable wrap-around hinge with 4 holes plate to fix

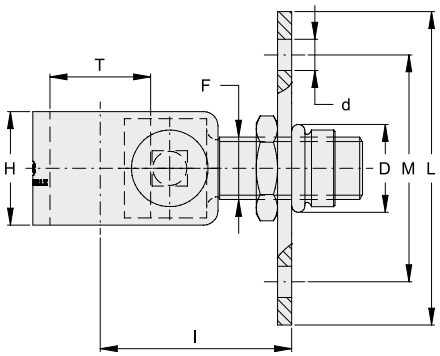

COD.	ART.	F	H	T	I	D	d	L	M		FINITURA
VC1305.A18	241.18	M18	35	30	50-70	28	9	90x90	64x64	6	zinc./galv.
VC1305.A22	241.22	M22	40	35	55-80	31	11	110x110	80x80	4	zinc./galv.
VC1305.A27	241.27	M27	45	40	65-85	40	13	130x130	90x90	4	zinc./galv.

VC1306

Cardine a fascia regolabile con piastra a 4 fori imbutita a fissare (brevettato)
Adjustable wrap-around hinge with deep-drawn 4 holes plate to fix (patented)

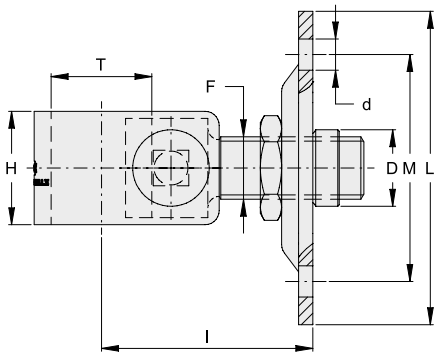

COD.	ART.	F	H	T	I	D	d	L	M		FINITURA
VC1306.A18	241B.18	M18	35	30	55-73	22	9	90x90	64x64	6	zinc./galv.
VC1306.A22	241B.22	M22	40	35	61-88	27	11	110x110	80x80	4	zinc./galv.
VC1306.A27	241B.27	M27	45	40	73-93	33	13	130x130	90x90	4	zinc./galv.

VC1307

Cardine a fascia con piastra a 4 fori a fissare
Wrap-around hinge with 4 holes plate to fix

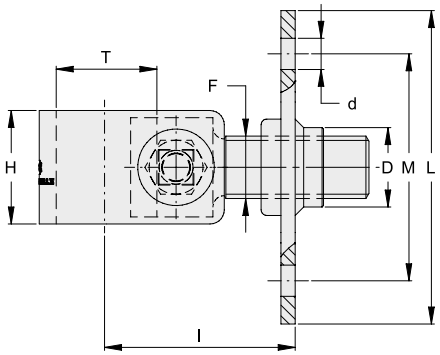

COD.	ART.	F	H	T	I	D	d	L	M		FINITURA
VC1307.A18	242.18	M18	35	30	47-70	23	9	90x90	64x64	6	zinc./galv.
VC1307.A22	242.22	M22	40	35	53-80	28	11	110x110	80x80	4	zinc./galv.
VC1307.A27	242.27	M27	45	40	63-85	35	13	130x130	90x90	4	zinc./galv.

VC1308

Cardine a fascia con piastra a 4 fori imbutita a fissare
Wrap-around hinge with deep-drawn 4 holes plate to fix

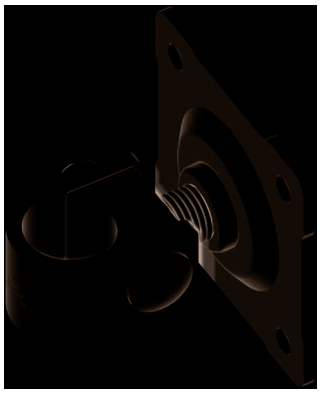

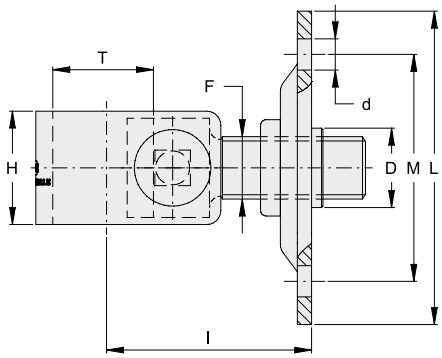

COD.	ART.	F	H	T	I	D	d	L	M		FINITURA
VC1308.A18	242B.18	M18	35	30	52-73	23	9	90x90	64x64	6	zinc./galv.
VC1308.A22	242B.22	M22	40	35	59-88	28	11	110x110	80x80	4	zinc./galv.
VC1308.A27	242B.27	M27	45	40	71-93	35	13	130x130	90x90	4	zinc./galv.

VC1309

Cardine a fascia regolabile con piastrina a 2 fori a fissare
Adjustable wrap-around hinge with 2 holes plate to fix

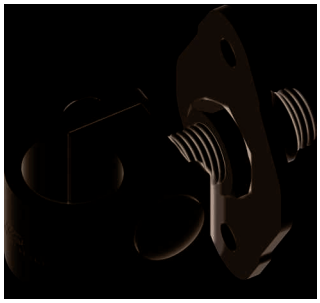

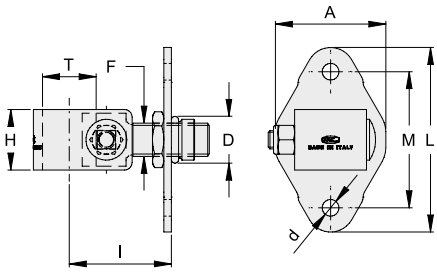

COD.	ART.	F	H	T	I	D	d	L	A	M		FINITURA
VC1309.A18	141.18	M18	35	30	50-70	28	9	100	60	74	6	zinc./galv.
VC1309.A22	141.22	M22	40	35	55-80	31	11	122	73	90	4	zinc./galv.

VC1310

Cardine a fascia con piastrina a 2 fori a fissare
Wrap-around hinge with 2 holes plate to fix

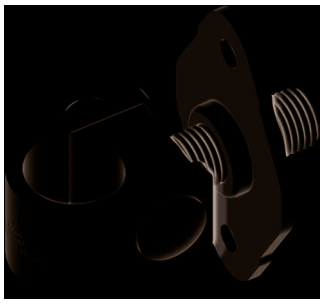

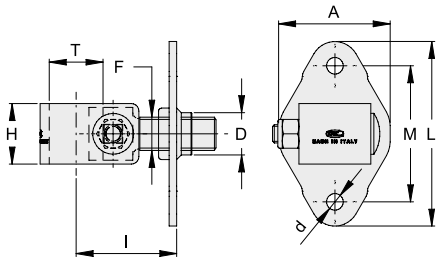

COD.	ART.	F	H	T	I	D	d	L	A	M		FINITURA
VC1310.A18	142.18	M18	35	30	47-70	23	9	100	60	74	6	zinc./galv.
VC1310.A22	142.22	M22	40	35	53-80	28	11	122	73	90	4	zinc./galv.

VC1311 NEW

Cardine a fascia regolabile con piastrina a 2 fori imbutita a fissare
Adjustable wrap-around hinge with deep-drawn 2 holes plate to fix

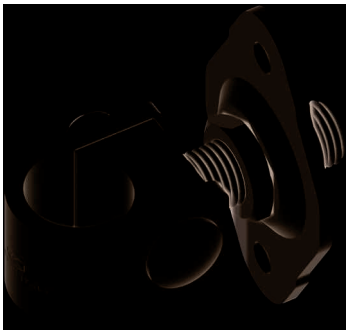

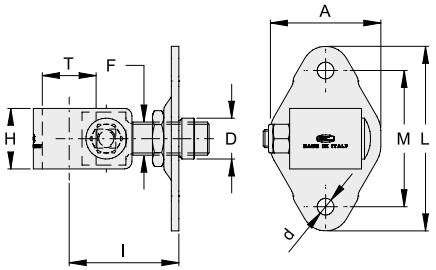

COD.	ART.	F	H	T	I	D	d	L	A	M		FINITURA
VC1311.A18	141B.18	M18	35	30	54-74	22	9	100	60	74	6	zinc./galv.
VC1311.A22	141B.22	M22	40	35	60-85	27	11	122	73	90	4	zinc./galv.

VC1312 NEW

Cardine a fascia con piastrina a 2 fori imbutita a fissare
Wrap-around hinge with deep-drawn 2 holes plate to fix

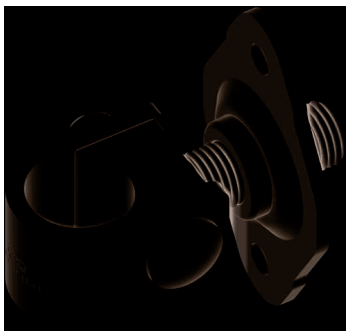

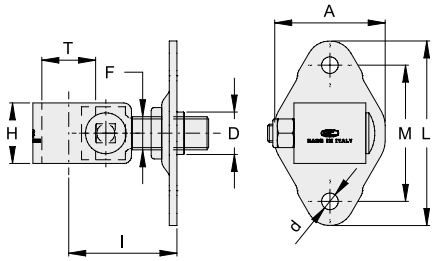

COD.	ART.	F	H	T	I	D	d	L	A	M		FINITURA
VC1312.A18	142B.18	M18	35	30	51-74	23	9	100	60	74	6	zinc./galv.
VC1312.A22	142B.22	M22	40	35	58-85	28	11	122	73	90	4	zinc./galv.

VC1330

Cardine a fascia filettato internamente
Wrap-around hinge with threaded head

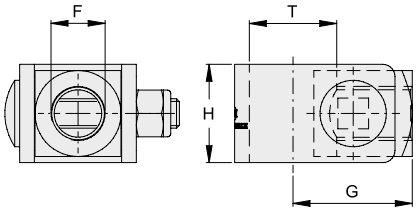

COD.	ART.	F	H	T	G		FINITURA
VC1330.A18	270.18	M18	35	30	43	10	zinc./galv.
VC1330.A22	270.22	M22	40	35	47	10	zinc./galv.
VC1330.A27	270.27	M27	45	40	55	6	zinc./galv.

VC1401

Cardine a fascia decorata a saldare
Wrap-around decorated hinge to weld

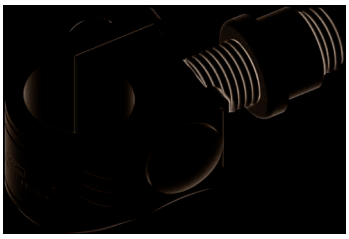

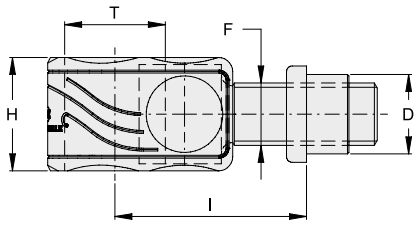

COD.	ART.	F	H	T	I	D		FINITURA
VC1401.A18	243.18D	M18	35	30	43-75	23	10	zinc./galv.
VC1401.A22	243.22D	M22	40	35	48-87	28	6	zinc./galv.
VC1401.A27	243.27D	M27	45	40	55-107	35	4	zinc./galv.

VC1404

Cardine a fascia decorata regolabile a saldare
Wrap-around decorated adjustable hinge to weld

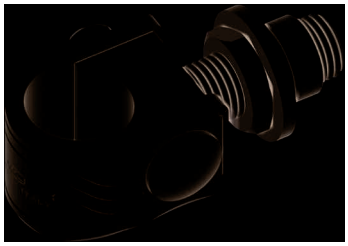

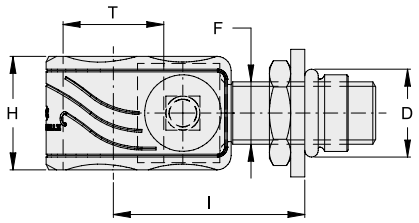

COD.	ART.	F	H	T	I	D		FINITURA
VC1404.A18	240.18D	M18	35	30	50-65	28	10	zinc./galv.
VC1404.A22	240.22D	M22	40	35	55-76	31	6	zinc./galv.
VC1404.A27	240.27D	M27	45	40	65-85	40	4	zinc./galv.

VC1405

Cardine decorato regolabile con piastra a 4 fori a fissare
Wrap-around decorated adjustable hinge with 4 holes plate to fix

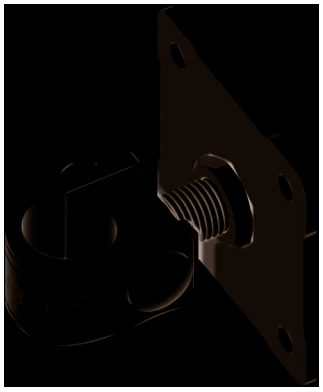

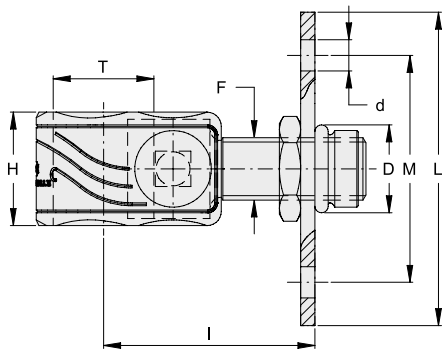

COD.	ART.	F	H	T	I	D	d	L	M		FINITURA
VC1405.A18	241.18D	M18	35	30	50-65	28	9	90x90	64x64	6	zinc./galv.
VC1405.A22	241.22D	M22	40	35	55-76	31	11	110x110	80x80	4	zinc./galv.
VC1405.A27	241.27D	M27	45	40	65-85	40	13	130x130	90x90	4	zinc./galv.

VC1406

Cardine a fascia decorata con piastra a 4 fori imbutita a fissare
Wrap-around decorated adjustable hinge with 4 holes deep-drawn plate to fix

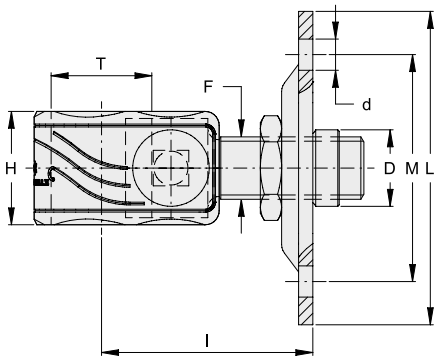

COD.	ART.	F	H	T	I	D	d	L	M		FINITURA
VC1406.A18	241B.18D	M18	35	30	55-70	22	9	90x90	64x64	6	zinc./galv.
VC1406.A22	241B.22D	M22	40	35	61-82	27	11	110x110	80x80	4	zinc./galv.
VC1406.A27	241B.27D	M27	45	40	73-93	33	13	130x130	90x90	4	zinc./galv.

VC1407

Cardine a fascia decorata con piastra a 4 fori a fissare
Decorated wrap-around hinge with 4 holes plate to fix

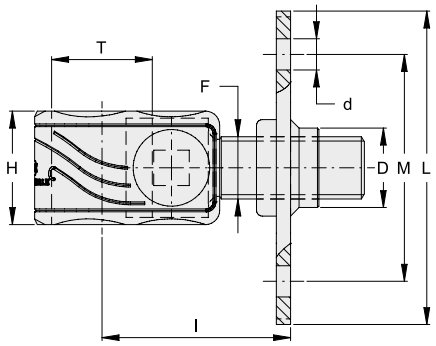

COD.	ART.	F	H	T	I	D	d	L	M		FINITURA
VC1407.A18	242.18D	M18	35	30	47-70	23	9	90x90	64x64	6	zinc./galv.
VC1407.A22	242.22D	M22	40	35	53-80	28	11	110x110	80x80	4	zinc./galv.
VC1407.A27	242.27D	M27	45	40	63-85	35	13	130x130	90x90	4	zinc./galv.

VC1408

Cardine a fascia decorata con piastra a 4 fori imbutita a fissare
Wrap-around decorated hinge with deep-drawn 4 holes plate to fix

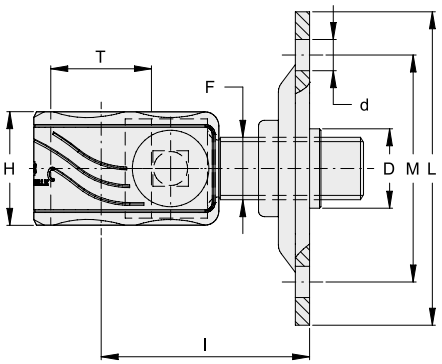

COD.	ART.	F	H	T	I	D	d	L	M		FINITURA
VC1408.A18	242B.18D	M18	35	30	52-73	23	9	90x90	64x64	6	zinc./galv.
VC1408.A22	242B.22D	M22	40	35	59-88	28	11	110x110	80x80	4	zinc./galv.
VC1408.A27	242B.27D	M27	45	40	71-93	35	13	130x130	90x90	4	zinc./galv.

VC1409

Cardine a fascia decorata regolabile con piastrina a 2 fori a fissare
Wrap-around decorated adjustable hinge with 2 holes plate to fix

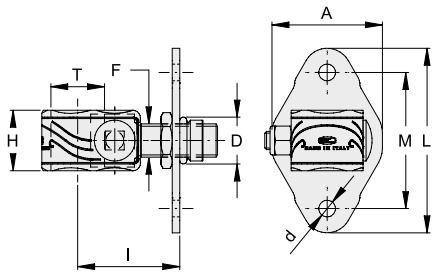

COD.	ART.	F	H	T	I	D	d	L	A	M		FINITURA
VC1409.A18	141.18D	M18	35	30	50-70	28	9	100	60	74	6	zinc./galv.
VC1409.A22	141.22D	M22	40	35	55-80	31	11	122	73	90	4	zinc./galv.

VC1410

Cardine a fascia decorata con piastrina 2 fori a fissare
Wrap-around decorated hinge with 2 holes plate to fix

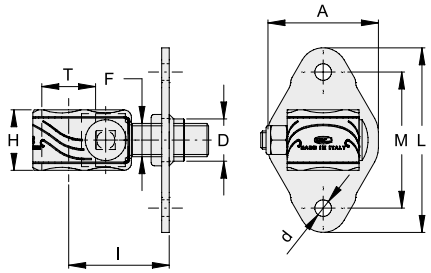

COD.	ART.	F	H	T	I	D	d	L	A	M		FINITURA
VC1410.A18	142.18D	M18	35	30	47-70	23	9	100	60	74	6	zinc./galv.
VC1410.A22	142.22D	M22	40	35	53-80	28	11	122	73	90	4	zinc./galv.

VC1411 NEW

Cardine a fascia decorata regolabile con piastrina a 2 fori imbutita a fissare
Wrap-around decorated adjustable hinge with 2 holes plate to fix

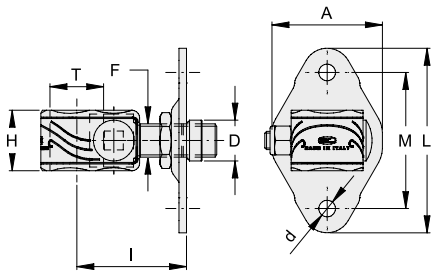

COD.	ART.	F	H	T	I	D	d	L	A	M		FINITURA
VC1411.A18	141B.18D	M18	35	30	54-74	22	9	100	60	74	6	zinc./galv.
VC1411.A22	141B.22D	M22	40	35	60-85	27	11	122	73	90	4	zinc./galv.

VC1412 NEW

Cardine a fascia decorata con piastrina a 2 fori imbutita a fissare
Wrap-around decorated hinge with 2 holes plate to fix

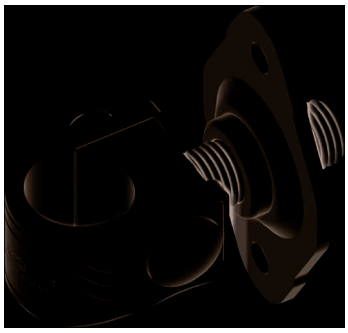

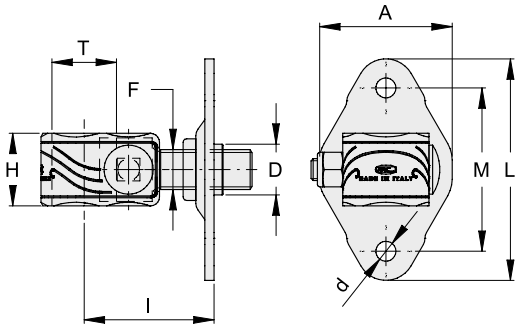

COD.	ART.	F	H	T	I	D	d	L	A	M		FINITURA
VC1412.A18	142B.18D	M18	35	30	51-74	23	9	100	60	74	6	zinc./galv.
VC1412.A22	142B.22D	M22	40	35	58-85	28	11	122	73	90	4	zinc./galv.

VC1430

Cardine a fascia decorata filettato internamente
Wrap-around decorated hinge with threaded head

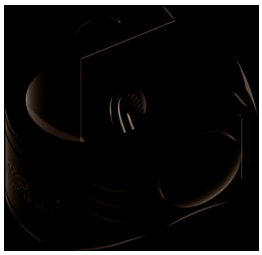

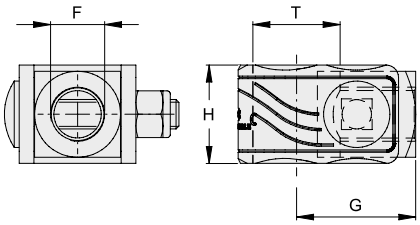

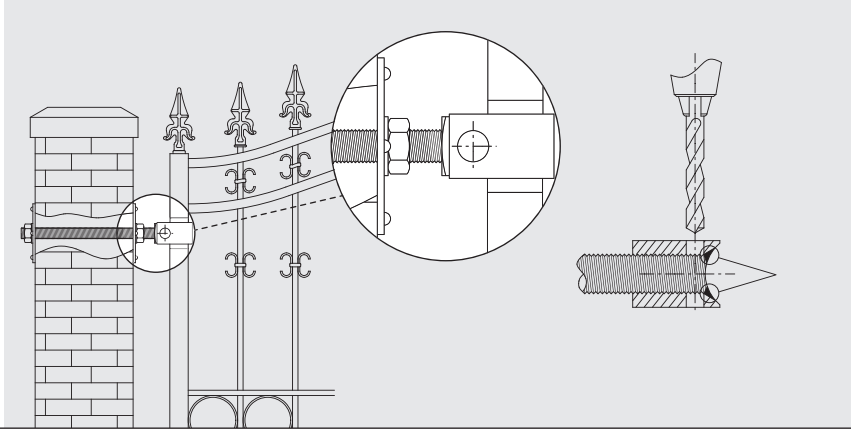

COD.	ART.	F	H	T	G		FINITURA
VC1430.A18	270.18D	M18	35	30	43	10	zinc./galv.
VC1430.A22	270.22D	M22	40	35	47	10	zinc./galv.
VC1430.A27	270.27D	M27	45	40	55	6	zinc./galv.

VC2101

Perno per cardini inferiori
Bottom pivot pin

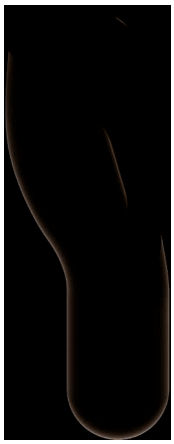

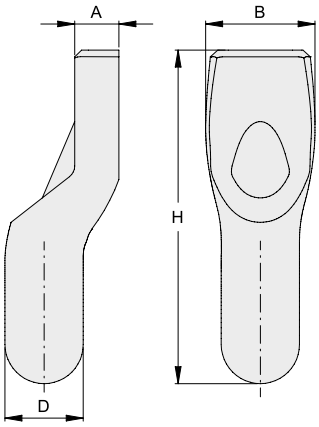

COD.	ART.	D	A	B	H		FINITURA
VC2101.020	120/Z	20	10	30	89	20	zinc./galv.
VC2101.023	121/Z	23	12	32	98	12	zinc./galv.
VC2101.028	124/Z	28	15	38	105	6	zinc./galv.
VC2101.020.I	1120	20	10	30	89	10	inox
VC2101.023.I	1121	23	12	32	98	10	inox
VC2101.020.L	120	20	10	30	89	20	lucido/black
VC2101.023.L	121	23	12	32	98	12	lucido/black
VC2101.028.L	124	28	15	38	105	6	lucido/black

Esempio di applicazione
Example of application

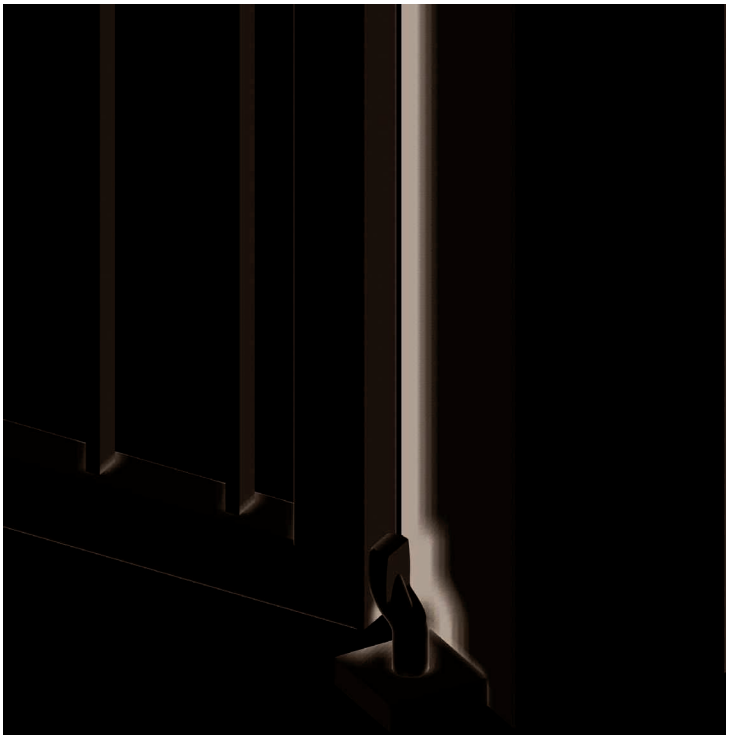

con cardini da/with hinges	**M18: G = 50 mm**
con cardini da/with hinges	**M22: G = 55 mm**
con cardini da/with hinges	**M27: G = 65 mm**

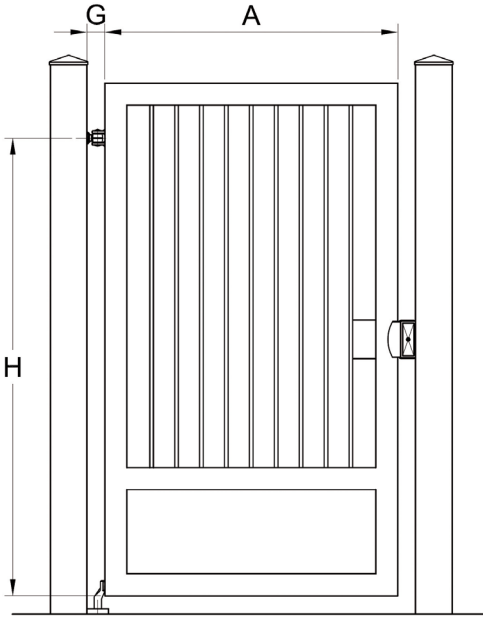

COD. **VC2101.020.L / VC2101.020 / VC2201.020.L / VC2201.020**	vanno abbinati ai cardini/to couple with hinges	**M18**
COD. **VC2101.023.L / VC2101.023 / VC2201.023.L / VC2201.023**	vanno abbinati ai cardini/to couple with hinges	**M22**
COD. **VC2101.028.L / VC2101.028 / VC2201.028.L / VC2201.028**	vanno abbinati ai cardini/to couple with hinges	**M27**

VC2111

Perno inferiore
Bottom pivot pin

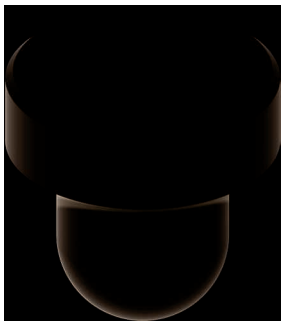

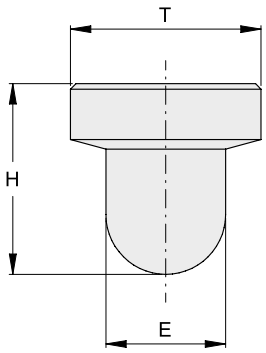

COD.	ART.	T	H	E		FINITURA
VC2111.020.L	250.30	30	35	19	10	lucido/black
VC2111.023.L	250.35	35	35	22	6	lucido/black
VC2111.028.L	250.40	40	35	27	4	lucido/black

VC2112

Perno inferiore per tubolare
Bottom pivot pin for tubular sections

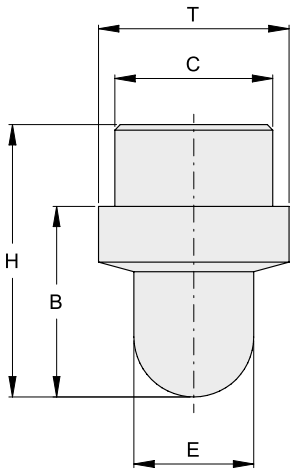

COD.	ART.	T	H	B	C	E		FINITURA
VC2112.020.L	251.30	30	50	35	24	19	10	lucido/black
VC2112.023.L	251.35	35	50	35	29	22	6	lucido/black
VC2112.023.L1	251.L	35	50	35	34	22	6	lucido/black
VC2112.028.L	251.40	40	50	35	34	27	4	lucido/black

VC2201

Piastra per perno inferiore a saldare
Hinge plate for bottom pin hinge to weld

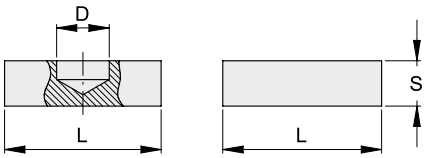

COD.	ART.	L	D	S		FINITURA
VC2201.020	122/Z	60	20	15	20	zinc./galv.
VC2201.023	123/Z	70	23	20	12	zinc./galv.
VC2201.028	125/Z	80	28	20	6	zinc./galv.
VC2201.020.I	1122	50	20	15	10	inox
VC2201.023.I	1123	60	23	20	10	inox
VC2201.020.L	122	60	20	15	20	lucido/black
VC2201.023.L	123	70	23	20	12	lucido/black
VC2201.028.L	125	80	28	20	6	lucido/black

VC2202

Piastra a 2 fori per perno inferiore a fissare
Bottom 2 holes plate for bottom pin hinge to fix

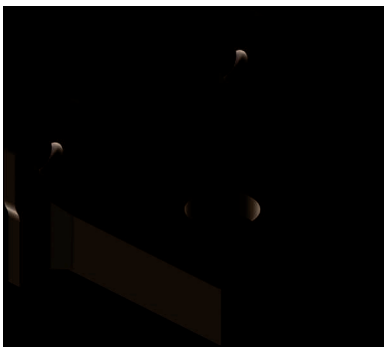

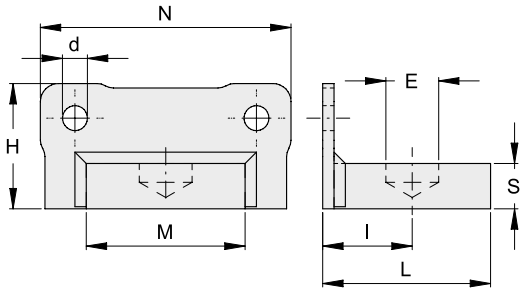

COD.	ART.	E	I	L	S	M	N	H	d		FINITURA
VC2202.020	122P	20	34	64	15	60	90	45	9	10	zinc./galv.
VC2202.023	123P	23	40	75	20	70	110	55	11	6	zinc./galv.
VC2202.028	125P	28	45	85	20	80	130	65	13	4	zinc./galv.

VC2203

Cardine inferiore regolabile per portoni ad ante a saldare
Bottom adjustable pivot hinge for swing gates to weld

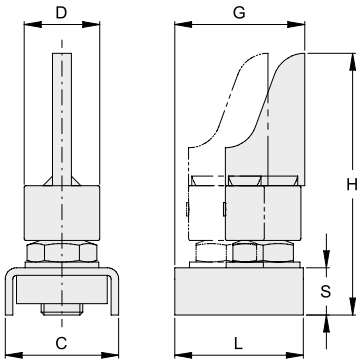

COD.	ART.	D	C	L	H	G	S		FINITURA
VC2203.030	289.30	30	50	62	120	42.5-60.5	22	6	zinc./galv.
VC2203.040	289.40	40	60	68	138	48-68	25	4	zinc./galv.
VC2203.050	289.50	50	70	82	159.5	58-78	25	4	zinc./galv.

VC2204

Cardine inferiore regolabile per portoni ad ante con piastra a 2 fori a fissare
Bottom adjustable pivot hinge for swing gates with 2 holes plate to fix

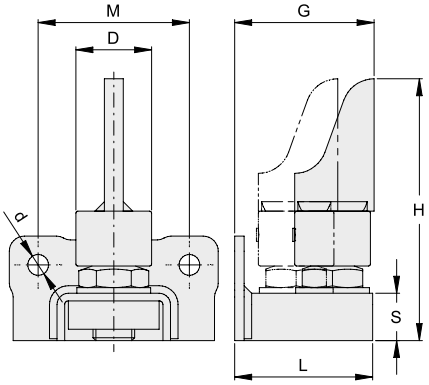

COD.	ART.	D	L	H	G	S	M	d		FINITURA
VC2204.030	289.30P	30	66	120	46.5-64.5	22	64	9	6	zinc./galv.
VC2204.040	289.40P	40	73	138	53-73	25	80	11	4	zinc./galv.
VC2204.050	289.50P	50	87	159.5	63-83	25	90	13	4	zinc./galv.

VC2211

Piastra inferiore per cardine inferiore
Bottom hinge plate for bottom pin hinge

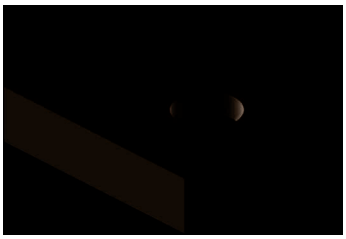

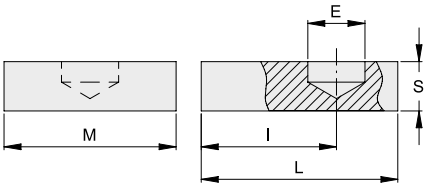

COD.	ART.	E	I	L	S	M		FINITURA	
VC2211.020.L	255.30S	20	51	75	15	60	10	lucido/black	va abbinato ai cardini in ferro battuto/for wrought iron pivots **M18**
VC2211.023.L	255.35S	23	55	80	20	70	6	lucido/black	va abbinato ai cardini in ferro battuto/for wrought iron pivots **M22**
VC2211.028.L	255.40S	28	65	90	20	80	4	lucido/black	va abbinato ai cardini in ferro battuto/for wrought iron pivots **M27**

VC2212

Piastra a 2 fori per perno inferiore
Bottom 2 holes plate for bottom pin hinge

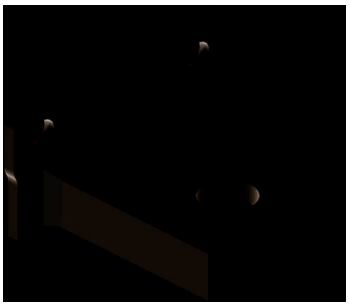

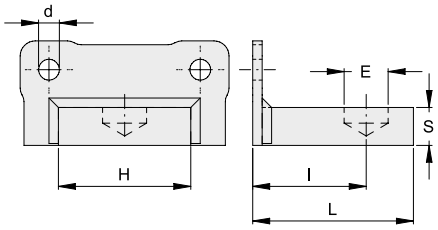

COD.	ART.	L	S	I	E	H	d		FINITURA	
VC2212.020	255.30P	79	15	55	20	60	9	10	zinc./galv.	va abbinato ai cardini in ferro battuto/for wrought iron pivots **M18**
VC2212.023	255.35P	85	20	60	23	70	11	6	zinc./galv.	va abbinato ai cardini in ferro battuto/for wrought iron pivots **M22**
VC2212.028	255.40P	95	20	70	28	80	13	4	zinc./galv.	va abbinato ai cardini in ferro battuto/for wrought iron pivots **M27**

VC2213

Cardine inferiore regolabile a saldare
Bottom adjustable hinge to weld

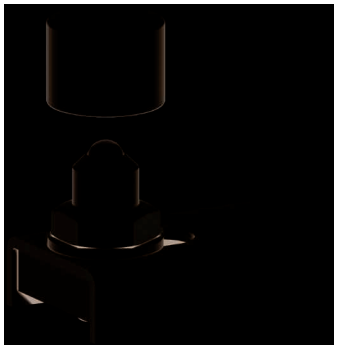

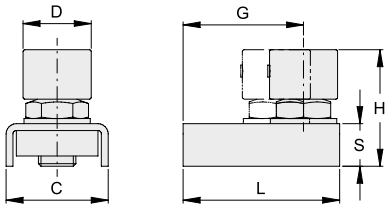

COD.	ART.	D	C	L	H	G	S		FINITURA
VC2213.030	287.30	30	50	84	60	45-63	22	6	zinc./galv.
VC2213.040	287.40	40	60	92	68.5	50-70	25	4	zinc./galv.
VC2213.050	287.50	50	70	109	79.5	60-80	25	4	zinc./galv.

VC2214

Cardine inferiore regolabile con piastra a 2 fori a fissare
Bottom adjustable pivot hinge with 2 holes plate to fix

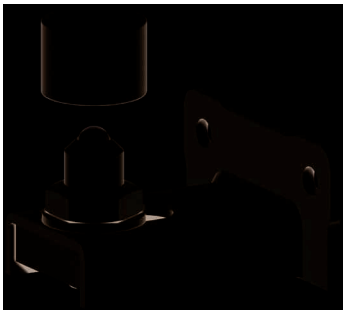

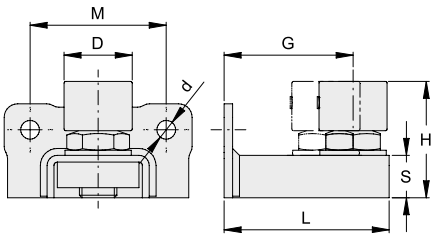

COD.	ART.	D	L	H	G	S	M	d		FINITURA
VC2214.030	287.30P	30	88	60	49-67	22	64	9	6	zinc./galv.
VC2214.040	287.40P	40	97	68.5	55-75	25	80	11	4	zinc./galv.
VC2214.050	287.50P	50	114	79.5	65-85	25	90	13	4	zinc./galv.

VC3101

Cardine a regolazione ortogonale tipo 1 a saldare
Two-way adjustment hinge type 1 to weld

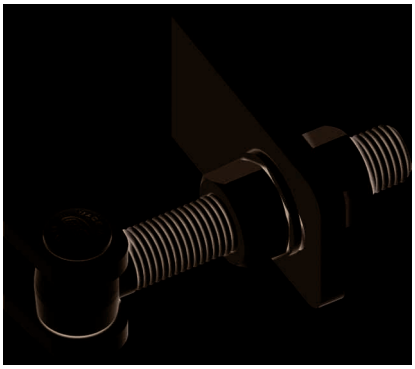

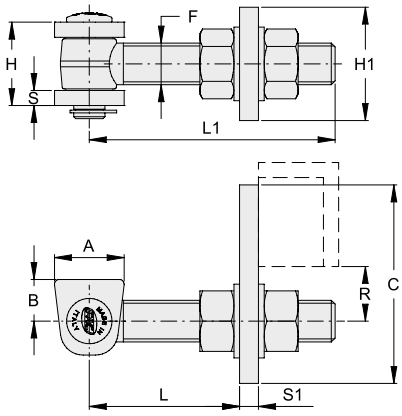

COD.	ART.	F	S	H	A	B	S1	H1	C	L	L1	R		FINITURA
VC3101.C18	300.18	M18	6	40	34	20	8	50	80	39-82	110	20-38	10	zinc./galv.
VC3101.C22	300.22	M22	8	45	38	23	10	60	105	46-97	130	23-45	6	zinc./galv.
VC3101.C27	300.27	M27	10	60	75	30	12	70	125	62-111	150	30-51	4	zinc./galv.
NEW VC3101.C18.I	1300.18	M18	5	36	34	20	8	50	80	34-82	110	20-38	10	inox
NEW VC3101.C22.I	1300.22	M22	6	40	38	23	10	60	105	40-97	130	23-45	6	inox

VC3102

Cardine a regolazione ortogonale tipo 2 a saldare
Two-way adjustment hinge type 2 to weld

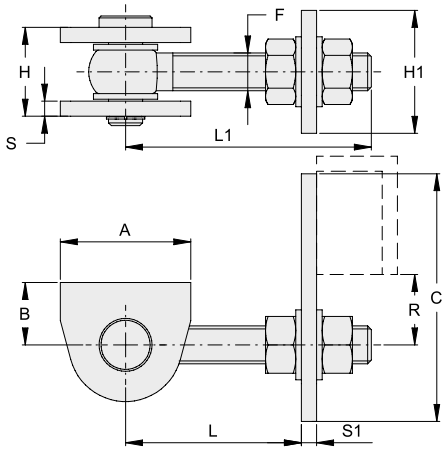

COD.	ART.	F	S	H	A	B	S1	H1	C	L	L1	R		FINITURA
VC3102.C12	5300.12	M12	6	33	45.5	24.5	6	50	75.5	40-80	103	14-26	8	zinc./galv.
VC3102.C16	5300.16	M16	6	38	50.5	27	8	50	90	47-93	121	18-34	4	zinc./galv.
VC3102.C20	5300.20	M20	8	47	69	33	8	65	131	60-98	130	20-55	6	zinc./galv.
VC3102.C24	5300.24	M24	8	52	69	33	12	75	131	60-115	152	25-47	4	zinc./galv.

VC3201

Cardine con cavallotto a regolazione ortogonale
Two-way adjustment hinge with bracket

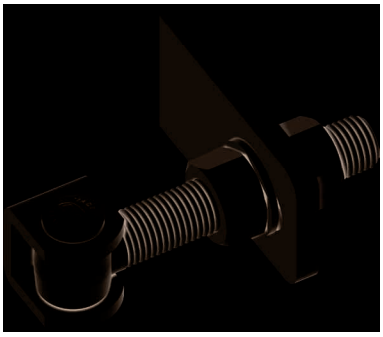

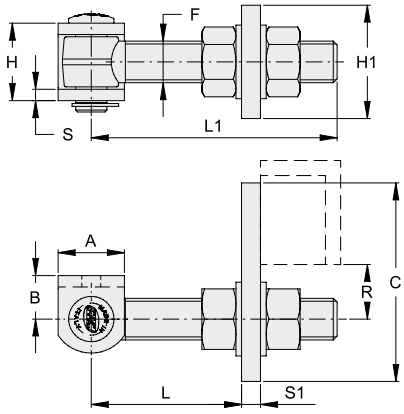

COD.	ART.	F	S	H	A	B	S1	H1	C	L	L1	R		FINITURA
VC3201.C18	300.18C	M18	6	40	34	21	8	50	80	39-82	110	20-38	10	zinc./galv.
VC3201.C22	300.22C	M22	8	45	38	23	10	60	105	46-97	130	23-45	6	zinc./galv.
VC3201.C27	300.27C	M27	10	60	75	35	12	70	125	62-111	150	30-51	4	zinc./galv.
NEW **VC3201.C18.I**	1300.18C	M18	5	37	30	19	8	50	80	34-82	110	20-38	10	inox
NEW **VC3201.C22.I**	1300.22C	M22	5	39	35	22	10	60	105	40-97	130	23-45	6	inox

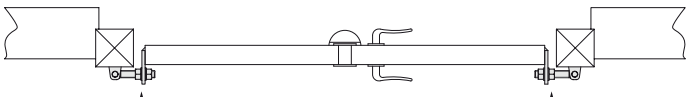

Regolazione ortogonale
Two-way adjustment

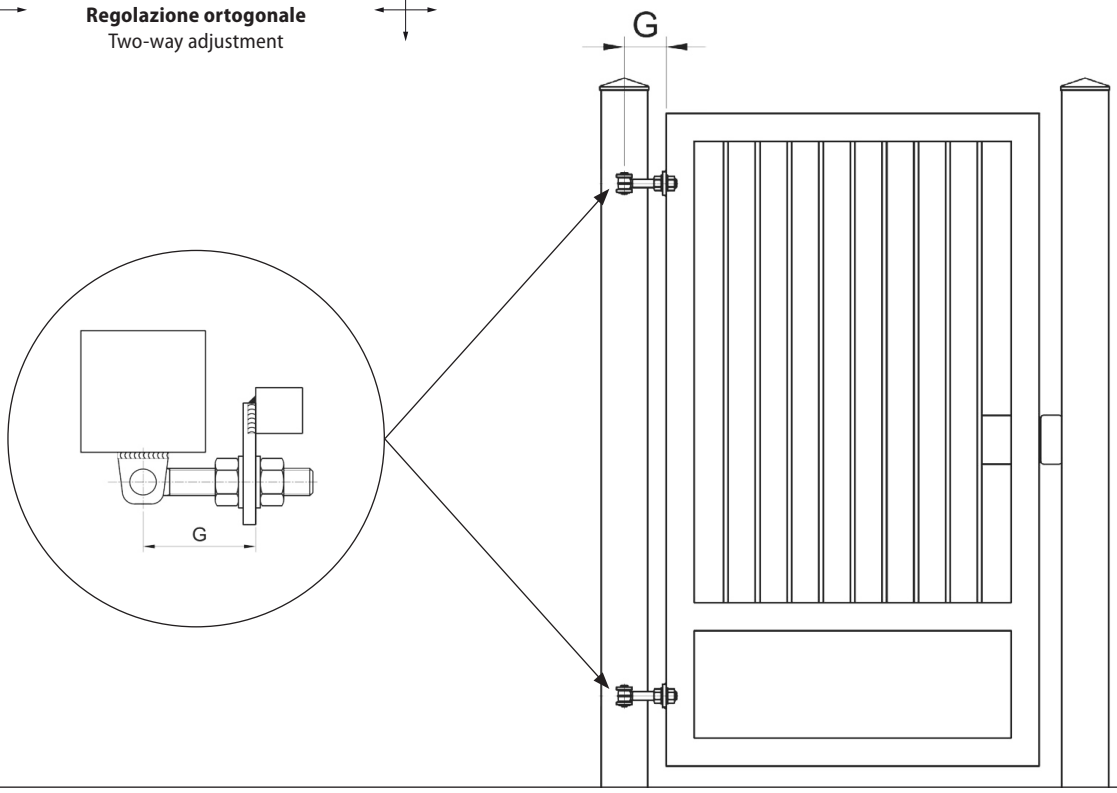

VC3301

Cardine regolabile per aperture fino a 180 gradi a saldare
Adjustable 180 degrees hinge to weld

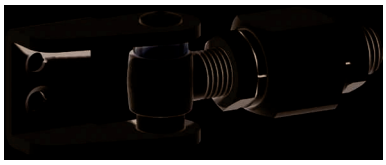

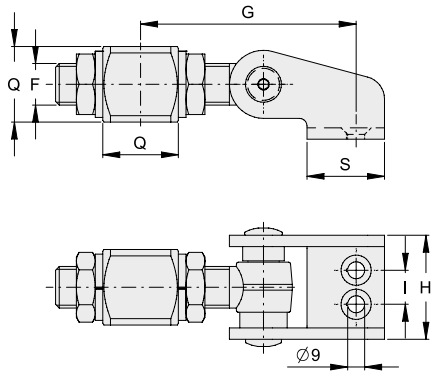

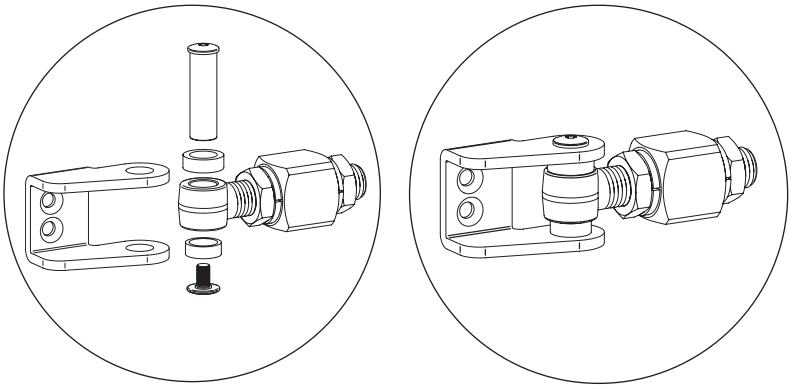

COD.	ART.	F	H	S	I	G	Q		FINITURA
VC3301.B18	236.18	18	50	30	18	87-102	35	6	zinc./galv.
VC3301.I22	236.22	22	55	41	18	103-125	40	6	zinc./galv.

VC3302

Cardine regolabile per aperture fino a 180 gradi con piastra a 4 fori a saldare
Adjustable 180 degrees hinge with 4 holes plate to weld

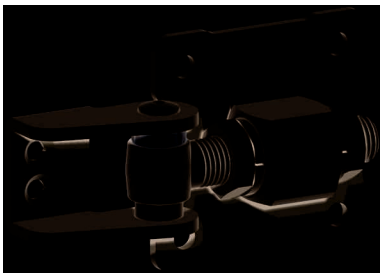

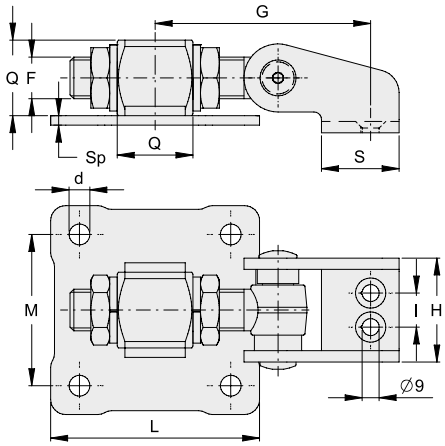

COD.	ART.	F	H	S	I	G	Q	L	M	d	Sp		FINITURA
VC3302.B18	236.18P	18	50	38	18	87-102	35	90	64	9	4	4	zinc./galv.
VC3302.I22	236.22P	22	55	41	18	103-125	40	110	80	11	5	2	zinc./galv.

VC4101

Cardine superiore regolabile con cuscinetto a saldare
Upper adjustable pivot hinge with ball bearing to weld

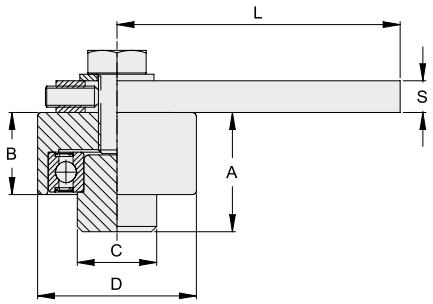

COD.	ART.	D	L	S	A	B	C		FINITURA
VC4101.040	260.40	40	67-77	8	30	21	25	12	zinc./galv.
VC4101.050	260.50	50	75-85	10	37	26	30	8	zinc./galv.
VC4101.060	260.60	60	102-112	12	45	31	30	4	zinc./galv.
VC4101.070	260.70	70	109-119	12	46	32	35	4	zinc./galv.
NEW **VC4101.090**	260.90	88	105-122	65	52	38	45	1	zinc./galv.
VC4101.040.I	1260.40	40	67-77	8	30	21	25	12	inox
VC4101.050.I	1260.50	50	75-85	10	37	26	30	8	inox
VC4101.060.I	1260.60	60	102-112	10	45	31	30	4	inox

VC4103

Cardine superiore regolabile con cuscinetto per tubolari a saldare
Upper adjustable pivot hinge with ball bearing for tubular sections to weld

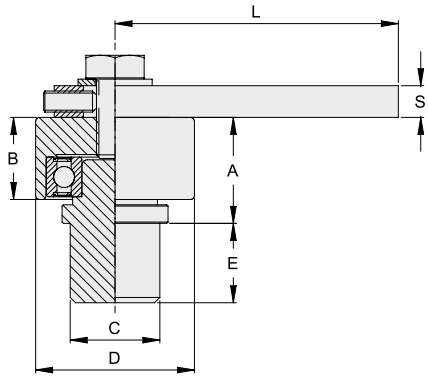

COD.	ART.	D	L	S	A	B	C	E		FINITURA
VC4103.060	261.60	60	102-112	12	42	31	34	30	4	zinc./galv.
VC4103.070	261.70	70	109-119	12	43	32	44	30	4	zinc./galv.

VC4111

Cardine superiore regolabile con cuscinetto e staffa a 4 fori a fissare
Upper adjustable pivot hinge with ball bearing and 4 holes bracket to fix

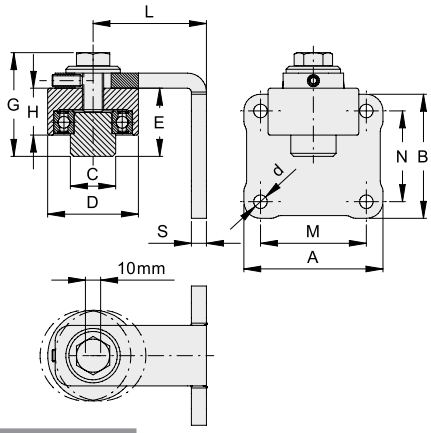

COD.	ART.	A	B	C	D	E	G	H	L	M	N	S	d		FINITURA
VC4111.040	262.40	70	60	25	40	30	47	21	60-70	50	40	8	7	6	zinc./galv.
VC4111.050	262.50	82	72	30	50	37	55	26	65-75	60	50	8	9	6	zinc./galv.
VC4111.060	262.60	92	82	30	60	45	66	31	70-80	70	60	10	9	4	zinc./galv.
VC4111.070	262.70	109	94	35	70	46	69	32	75-85	85	70	10	11	4	zinc./galv.
NEW VC4111.090	262.90	145	105	45	88	52	101	38	92-108	115	75	6	13	1	zinc./galv.

VC4113

Cardine superiore regolabile con cuscinetto e staffa a 4 fori per tubolare a fissare
Upper adjustable pivot hinge with ball bearing and 4 holes bracket for tubular sections to fix

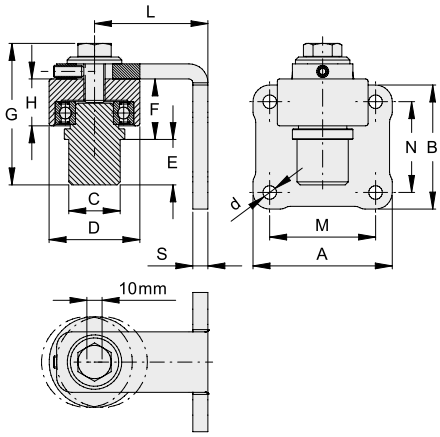

COD.	ART.	A	B	C	D	E	F	G	H	L	M	N	S	d		FINITURA
VC4113.060	263.60	92	82	34	60	30	40	93	31	70-80	70	60	10	9	4	zinc./galv.
VC4113.070	263.70	109	94	44	70	30	41	96	32	75-85	85	70	10	11	2	zinc./galv.

VC4141

Cardine superiore semplificato con cuscinetto a saldare
Simple upper pivot hinge with ball bearing to weld

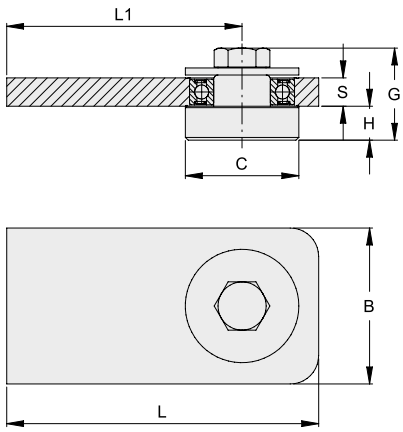

COD.	ART.	B	C	G	H	L	L1	S			FINITURA
VC4141.030	280.30	45	32	29	12	100	77	8	1	12	zinc./galv.
VC4141.050	280.50	55	40	32	12	110	82	10	1	8	zinc./galv.

VC4201

Cardine inferiore con cuscinetto a saldare
Bottom pivot hinge with ball bearing to weld

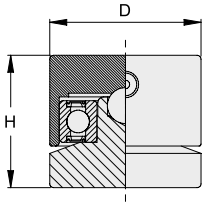

COD.	ART.	D	H		FINITURA
VC4201.040	265.40	40	35	12	zinc./galv.
VC4201.040.I	1265.40	40	45	12	inox

VC4202

Cardine inferiore con cuscinetto a rulli conici a saldare
Bottom pivot hinge with tapered roller bearing to weld

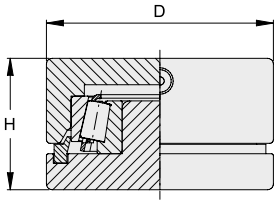

COD.	ART.	D	H		FINITURA
VC4202.050	265.50	50	32	8	zinc./galv.
VC4202.060	265.60	60	35	4	zinc./galv.
VC4202.070	265.70	70	40	4	zinc./galv.
NEW **VC4202.090**	265.90	88	46	1	zinc./galv.
VC4202.050.I	1265.50	50	32	8	inox
VC4202.060.I	1265.60	60	35	4	inox

VC4203

Cardine inferiore con cuscinetto a rulli conici per tubolari a saldare
Bottom pivot hinge with tapered roller bearing for tubular sections to weld

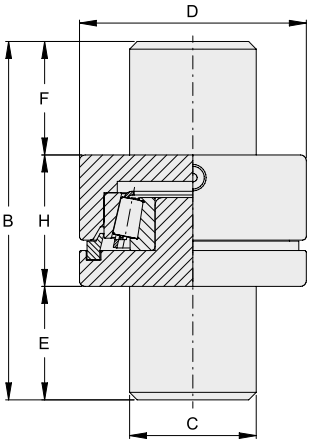

COD.	ART.	D	H	B	C	E	F		FINITURA
VC4203.060	266.60	60	35	95	34	30	30	4	zinc./galv.
VC4203.070	266.70	70	40	95	44	30	25	4	zinc./galv.

VC4211

Cardine inferiore con cuscinetto e staffa a 4 fori a fissare
Pivot hinge with ball bearing and 4 holes bracket to fix

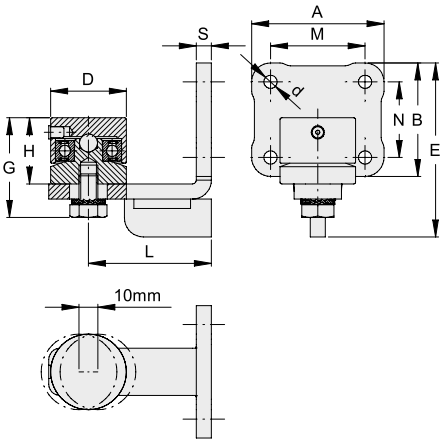

COD.	ART.	A	B	D	E	G	H	L	M	N	S	d		FINITURA
VC4211.040	267.40	70	60	40	92	51	35	60-70	50	40	8	7	8	zinc./galv.

VC4212

Cardine inferiore con cuscinetto a rulli conici e staffa a 4 fori a fissare
Bottom pivot hinge with tapered roller bearing and 4 holes bracket to fix

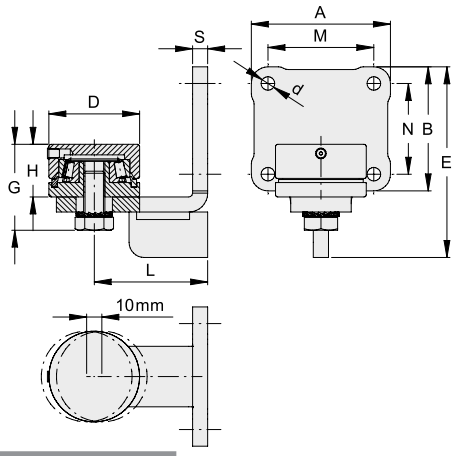

COD.	ART.	A	B	D	E	G	H	L	M	N	S	d		FINITURA
VC4212.050	267.50	82	72	50	110	50	32	65-75	60	50	8	9	6	zinc./galv.
VC4212.060	267.60	92	82	60	126	55	35	70-80	70	60	10	9	4	zinc./galv.
VC4212.070	267.70	109	94	70	143	63	40	75-85	85	70	10	11	4	zinc./galv.
NEW VC4212.090	267.90	145	105	88	134	94	46	92-108	115	75	6	13	1	zinc./galv.

VC4213

Cardine inferiore con cuscinetto a rulli conici e staffa a 4 fori per tubolare a fissare
Bottom pivot hinge with tapered roller bearing and 4 holes bracket for tubular sections to fix

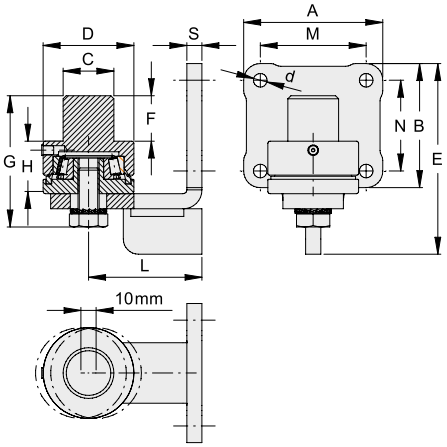

COD.	ART.	A	B	C	D	E	F	G	H	L	M	N	S	d		FINITURA
VC4213.060	268.60	92	82	34	60	126	30	86	35	70-80	70	60	10	9	4	zinc./galv.
VC4213.070	268.70	109	94	44	70	143	27	88	40	75-85	85	70	10	11	2	zinc./galv.

VC4221

Cardine inferiore con cuscinetto e piastra a 4 fori fissaggio a terra
Bottom pivot hinge with ball bearing and surface mount 4 holes plate to fix

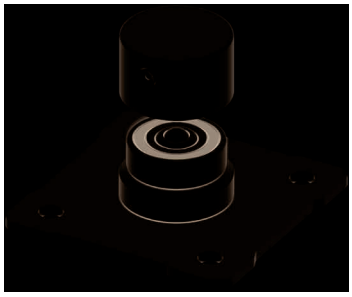

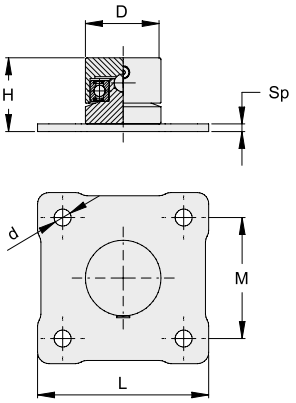

COD.	ART.	D	H	L	M	Sp	d		FINITURA
VC4221.040	265.40P	40	39	90	64	4	9	6	zinc./galv.

VC4222

Cardine inferiore con cuscinetto a rulli conici e piastra a 4 fori fissaggio a terra
Bottom pivot hinge with tapered roller bearing and surface mount 4 holes plate to fix

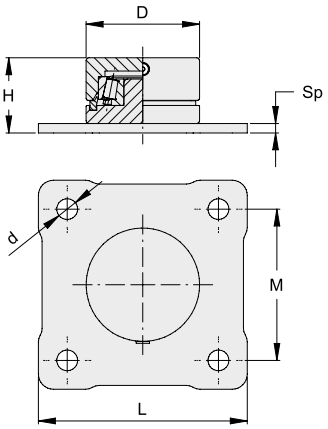

COD.	ART.	D	H	L	M	Sp	d		FINITURA
VC4222.050	265.50P	50	36	90	64	4	9	6	zinc./galv.
VC4222.060	265.60P	60	40	110	80	5	11	4	zinc./galv.
VC4222.070	265.70P	70	45	110	80	5	11	4	zinc./galv.

VC4223 NEW

Cardine inferiore con cuscinetto a rulli conici e piastra a 4 fori fissaggio a terra per tubolari
Bottom pivot hinge with tapered roller bearing with 4 holes plate to fix for tubular sections

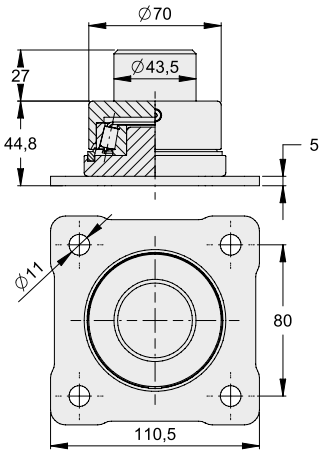

COD.	ART.		FINITURA
VC4223.070	266.70P	4	zinc./galv.

VC4231

Cardine inferiore con cuscinetto e tassello per fissaggio a terra
Pivot hinge with ball bearing and ground anchor

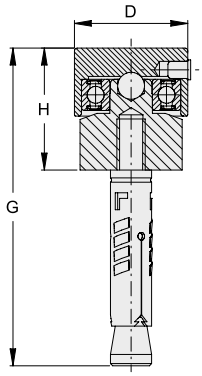

COD.	ART.	D	G	H	TASSELLO	FORO		FINITURA
VC4231.040	265.40T	40	112	44	M10	15	8	zinc./galv.

VC4232

Cardine con cuscinetto a rulli conici e tassello per fissaggio a terra
Pivot hinge with tapered roller bearing and ground anchor

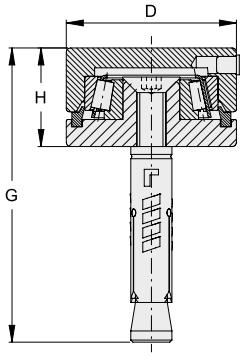

COD.	ART.	D	G	H	TASSELLO	FORO		FINITURA
VC4232.050	265.50T	50	90	32	M8	12	8	zinc./galv.
VC4232.060	265.60T	60	105	35	M10	15	4	zinc./galv.
VC4232.070	265.70T	70	125	40	M12	18	4	zinc./galv.

VC4233

Cardine inferiore con cuscinetto a rulli conici e tassello per fissaggio a terra
Bottom pivot hinge with tapered roller bearing and ground anchor

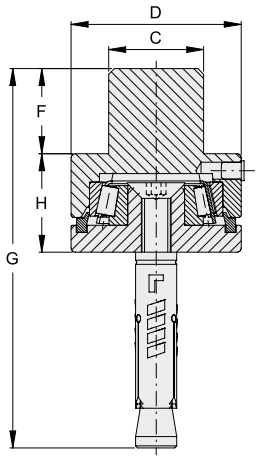

COD.	ART.	D	C	F	G	H	TASSELLO	FORO		FINITURA
VC4233.060	266.60T	60	34	30	135	35	M10	15	4	zinc./galv.
VC4233.070	266.70T	70	44	25	150	40	M12	18	4	zinc./galv.

VC4241

Cardine inferiore con ingrassatore
Bottom pivot hinge with lubrication nipple

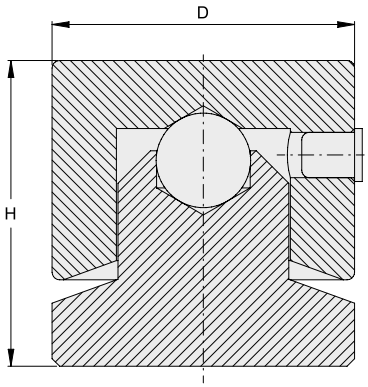

COD.	ART.	D	H	d sfera ball		FINITURA
VC4241.030	285.30	30	35	9.5	12	zinc./galv.
VC4241.040	285.40	40	40	12.5	12	zinc./galv.
VC4241.050	285.50	50	50	15	8	zinc./galv.
VC4241.060	285.60	60	63	18	8	zinc./galv.

VC4243

Cardine inferiore per tubolari
Bottom pivot hinge for tubular sections

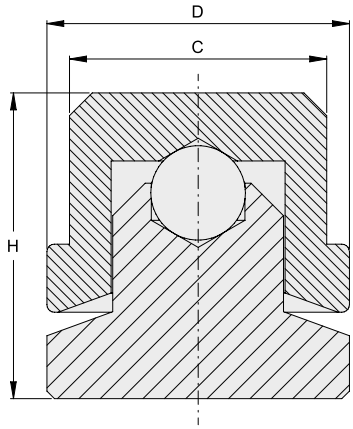

COD.	ART.	D	C	H	d sfera ball		FINITURA
VC4243.030	286.30	30	26	35	9.5	12	zinc./galv.
VC4243.035	286.35	35	29	35	9.5	12	zinc./galv.
VC4243.040	286.40	40	34	40	12.5	12	zinc./galv.
VC4243.050	286.50	50	44	50	15	8	zinc./galv.
VC4243.060	286.60	60	54	63	18	8	zinc./galv.

VC5101

Battente a terra per cancelli a 2 ante
Ground centre stop for double swing gates

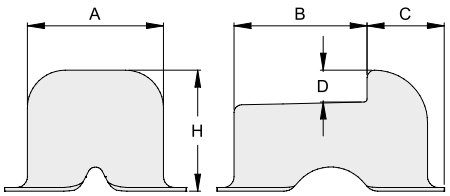

COD.	ART.	A	B	C	D	H		FINITURA
VC5101.070	145	72	66	34	18	70	40	zinc./galv.
VC5101.090	146	90	90	40	21	86	20	zinc./galv.
VC5101.070.I	1145	72	66	34	18	70	10	inox
VC5101.090.I	1146	90	90	40	21	86	10	inox

VC5102

Battente a terra con flangia per cancelli a 2 ante a fissare
Ground centre stop with flange for double swing gates to fix

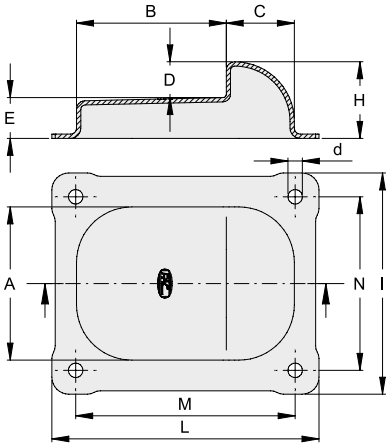

COD.	ART.	A	B	C	D	E	H	d	L	I	M	N		FINITURA
VC5102.070	145F	70	66	34	18	19	37	6.5	122	100	100	78	20	zinc./galv.
VC5102.090	146F	90	90	40	21	23	44	8.5	157	130	129	102	10	zinc./galv.
VC5102.090.I	1146F	90	90	40	21	23	44	8.5	157	130	129	102	10	inox

VC5103

Battente a terra con piastra interna per cancelli a 2 ante a fissare
Ground centre stop plate for double swing gates to fix

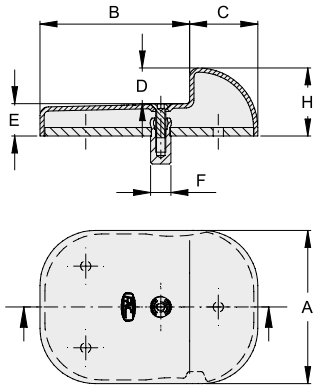

COD.	ART.	A	B	C	D	E	F	H		FINITURA
VC5103.070	145P	70	66	34	18	13	12	31	10	zinc./galv.
VC5103.090	146P	90	90	40	21	18	12	39	4	zinc./galv.
VC5103.070.I	1145P	70	66	34	18	13	12	31	10	inox
VC5103.090.I	1146P	90	90	40	21	18	12	39	4	inox

VC5122

Piastrina di sollevamento per battenti flangiati a fissare
Spacer for flanged ground centre stop to fix

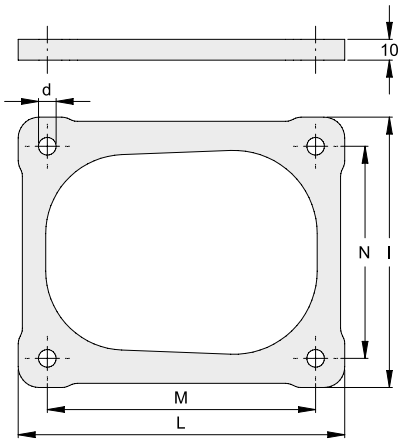

COD.	ART.	d	L	I	M	N		FINITURA
VC5122.070	145FSP	6.5	122	100	100	78	8	zinc./galv.
VC5122.090	146FSP	8.5	157	130	129	102	8	zinc./galv.

VC5123

Piastrina di sollevamento per battenti bassi a fissare
Spacer for ground centre stop

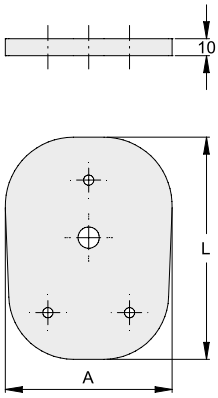

COD.	ART.	A	L		FINITURA
VC5123.070	145SP	74	102	10	zinc./galv.
VC5123.090	146SP	98	130.5	4	zinc./galv.

VC5200

Battente porta-incontro per elettroserrature regolabile
Adjustable door strike for electric locks

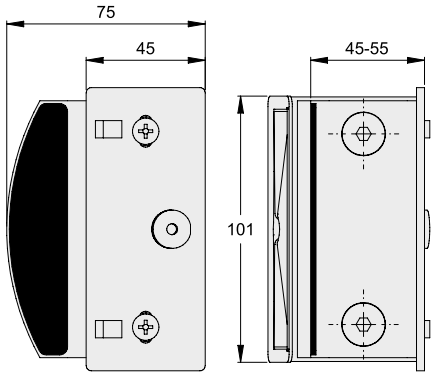

COD.	ART.		FINITURA
VC5200.050	150	4	zinc./galv.

VC5201

Battente porta-incontro per elettroserrature
Door strike for electric locks

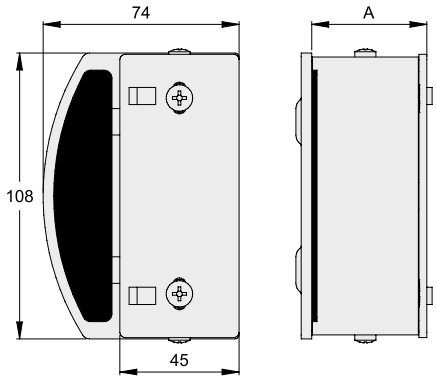

COD.	ART.	A		FINITURA
VC5201.030	151.30	30	6	zinc./galv.
VC5201.035	151.35	35	6	zinc./galv.
VC5201.040	151.40	40	6	zinc./galv.
VC5201.050	151.50	50	4	zinc./galv.
VC5201.060	151.60	60	4	zinc./galv.

VC5202

Battente porta-incontro con 4 fori nascosti per elettroserrature
Door strike with 4 hidden holes for electric locks

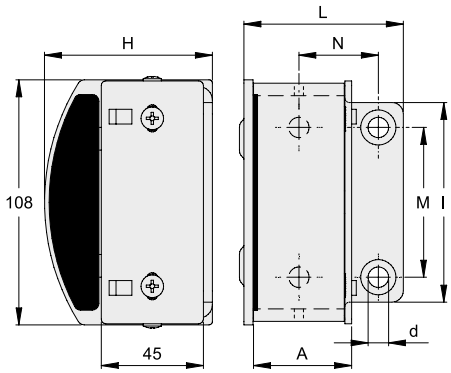

COD.	ART.	A	H	I	L	M	N	d		FINITURA
VC5202.030	152.30	30	74	90	60	66	30	9	6	zinc./galv.
VC5202.035	152.35	35	74	90	65	66	30.75	9	6	zinc./galv.
VC5202.040	152.40	40	74	90	70	66	35	9	6	zinc./galv.
VC5202.050	152.50	50	74	90	80	66	40	9	4	zinc./galv.

VC5203 NEW

Battente per serrature ad incasso
Door strike for recessed safety locks

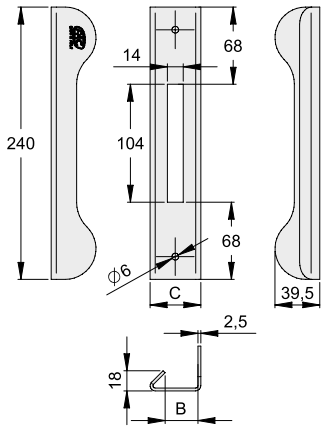

COD.	ART.	B	C		FINITURA
VC5203.040	153.40	29	45	4	zinc./galv.

VC5210

Battente porta-incontro regolabile con piastra a 4 fori per elettroserrature
Adjustable door strike with 4 holes plate for electric locks

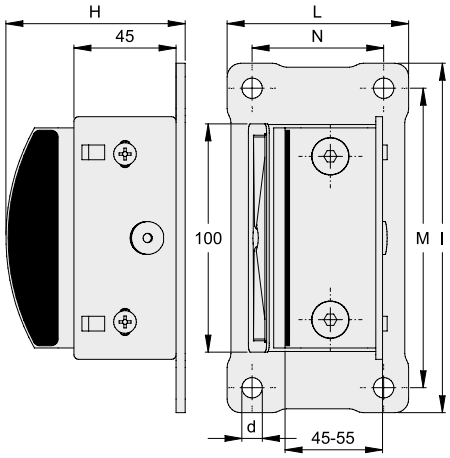

COD.	ART.	H	I	L	M	N	d		FINITURA
VC5210.050	150P	79.5	154	80	132	58	9	2	zinc./galv.

VC5211

Battente porta-incontro con piastra 4 fori per elettroserrature a fissare
Door strike with 4 holes plate for electric locks to fix

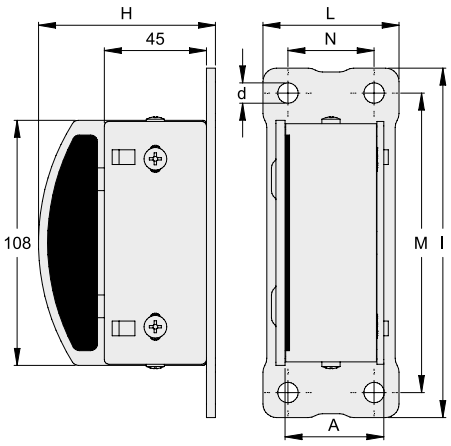

COD.	ART.	A	H	I	L	M	N	d		FINITURA
VC5211.030	151.30P	30	78	154	60	132	38	9	4	zinc./galv.
VC5211.035	151.35P	35	78	154	60	132	38	9	4	zinc./galv.
VC5211.040	151.40P	40	78	154	60	132	38	9	2	zinc./galv.
VC5211.050	151.50P	50	78	154	80	132	58	9	2	zinc./galv.
VC5211.060	151.60P	60	78	154	80	132	58	9	2	zinc./galv.

VC5300 NEW

Battente a parete con tassello
Wall stop with wall anchor

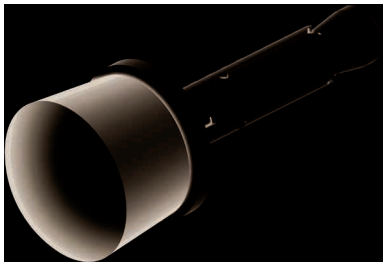

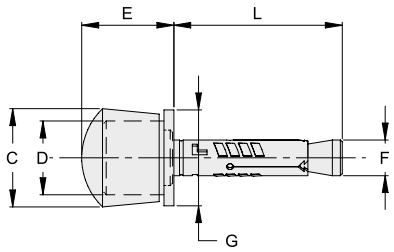

COD.	ART.	C	D	E	F	L	G		FINITURA
VC5300.030	149T.30	40	30	37.5	14.5	68.5	39	8	zinc./galv.

VC5301 NEW

Battente a parete con piastra imbutita a due fori a fissare
Wall stop with 2 holes deep-drawn plate to fix

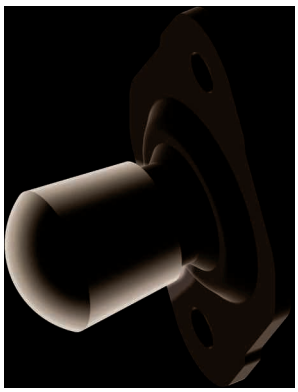

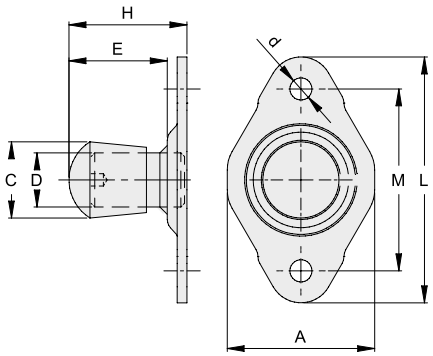

COD.	ART.	C	D	E	H	L	A	M	d		FINITURA
VC5301.022	149.22.1	31	22	38.5	48	100	60	74	9	8	zinc./galv.
VC5301.030	149.30.1	40	30	39	50	122	73	90	11	4	zinc./galv.

VC5302 NEW

Battente a parete con piastra imbutita a 4 fori a fissare
Wall stop with 4 holes deep-drawn plate to fix

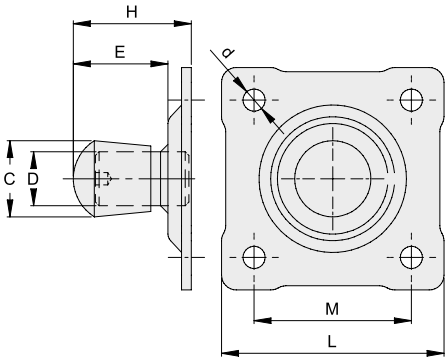

COD.	ART.	C	D	E	H	L	M	d		FINITURA
VC5302.022	149.22.2	31	22	38.5	48	90x90	64x64	9	8	zinc./galv.
VC5302.030	149.30.2	40	30	39	50	110x110	80x80	11	4	zinc./galv.

VC5303 NEW

Battente a parete con piastra imbutita a 4 fori a fissare
Wall stop with 4 holes deep-drawn plate to fix

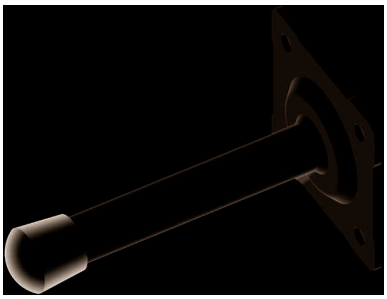

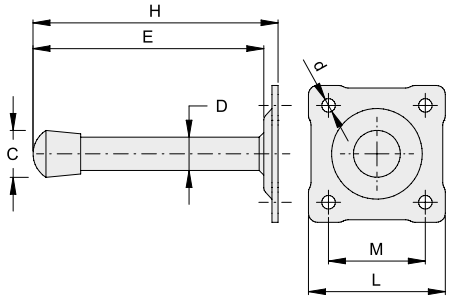

COD.	ART.	C	D	E	H	L	M	d		FINITURA
VC5303.022	149.22.3	31	22	152.5	162	90x90	64x64	9	8	zinc./galv.
VC5303.030	149.30.3	40	30	251.5	262.5	110x110	80x80	11	4	zinc./galv.

VC6101

Perno quadro di collegamento forato tipo 1
Square connecting drilled pin type 1

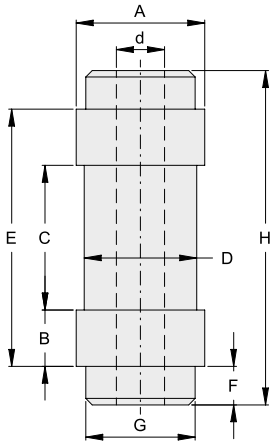

COD.	ART.	D	A	G	H	E	B	C	F	d		FINITURA
VC6101.030.L	247.18F	30	35	29	89	69	14.5	40	10	15	10	lucido/black
VC6101.035.L	247.22F	35	40	34	104	80	17.5	45	12	15	6	lucido/black
VC6101.040.L	247.27F	40	50	44	110	80	15	50	15	15	4	lucido/black

VC6102

Perno quadro di collegamento forato tipo 2
Square connecting drilled pin type 2

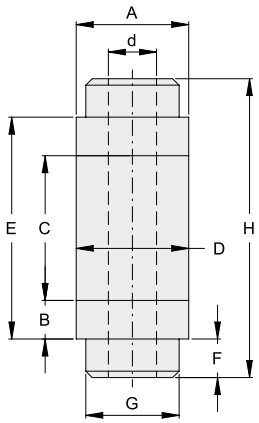

COD.	ART.	D	A	G	H	E	B	C	F	d		FINITURA
VC6102.030.L	247.30F	30	30	24	80	60	10	40	10	15	10	lucido/black
VC6102.035.L	247.35F	35	35	29	93	69	12	45	12	15	6	lucido/black
VC6102.040.L	247.40F	40	40	34	110	80	15	50	15	15	4	lucido/black

VC6201

Perno quadro di collegamento e guida superiore tipo 1
Square upper coneecting guide pin type 1

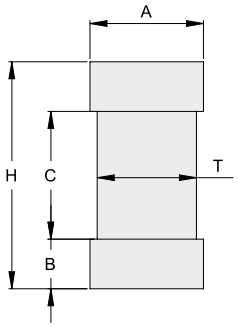

COD.	ART.	T	H	A	B	C		FINITURA
VC6201.030.L	247.18	30	69	35	14.5	40	10	lucido/black
VC6201.035.L	247.22	35	80	40	17.5	45	6	lucido/black
VC6201.040.L	247.27	40	80	50	15	50	4	lucido/black

VC6202

Perno di collegamento quadro e guida superiore tipo 2
Upper square connecting guide pin type 2

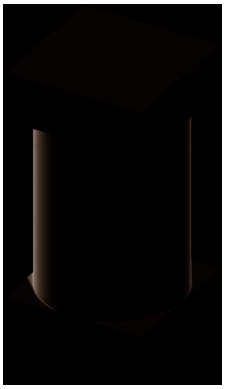

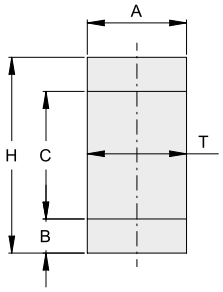

COD.	ART.	T	H	A	B	C		FINITURA
VC6202.030.L	247.30	30	60	30	10	40	10	lucido/black
VC6202.035.L	247.35	35	69	35	12	45	6	lucido/black
VC6202.040.L	247.40	40	80	40	15	50	4	lucido/black

VC6211

Perno di collegamento e guida superiore a saldare
Upper connecting guide pin to weld

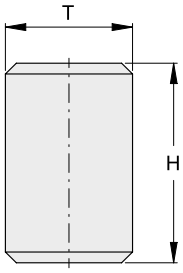

COD.	ART.	T	H		FINITURA
VC6211.030.L	245.30	30	50	10	lucido/black
VC6211.035.L	245.35	35	55	6	lucido/black
VC6211.040.L	245.40	40	70	4	lucido/black

VC6212

Perno di collegamento e guida superiore per tubolare
Upper connecting guide pin for tubular sections

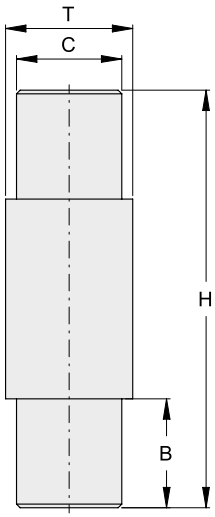

COD.	ART.	T	H	B	C		FINITURA
VC6212.030.L	246.30	30	110	30	24	10	lucido/black
VC6212.035.L	246.35	35	115	30	29	6	lucido/black
VC6212.035.L1	246.L	35	115	30	34	6	lucido/black
VC6212.040.L	246.40	40	130	30	34	4	lucido/black

VC9101

Cavo anticaduta
Door fall-safety cable

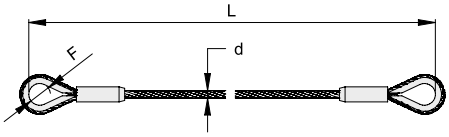

COD.	ART.	F	L	d	Kg 1	Kg 2		FINITURA
VC9101.400	239.404	11.5	400	4	320	640	10	zinc./galv.
VC9101.500	239.505	17.5	500	5	500	1000	10	zinc./galv.
NEW VC9101.400.I	1239.404	11.5	400	4	320	640	10	inox
NEW VC9101.500.I	1239.505	17.5	500	5	500	1000	10	inox

Portata cavo-Coefficiente di sicurezza 2.5
Cable capacity-Safety factor 2.5

VC9111

Cavo anticaduta con barra filettata e dadi-fissaggio alla colonna
Door fall-safety cable with threaded rod and nuts to fix in column

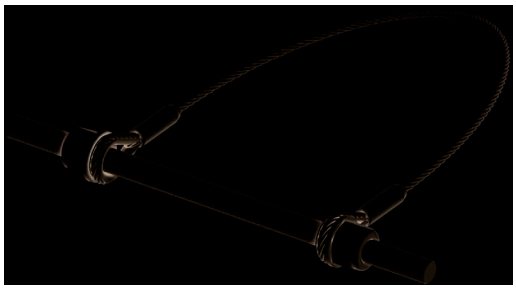

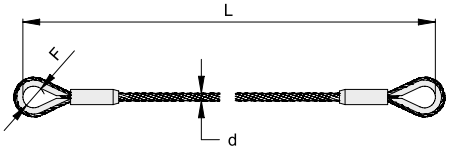

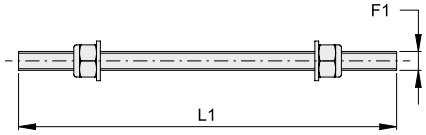

COD.	ART.	F	L	d	Kg1	Kg2	F1	L1		FINITURA
VC9111.400	239.404B	11.5	400	4	320	640	M10	200	10	zinc./galv.
VC9111.500	239.505B	17.5	500	5	500	1000	M12	200	10	zinc./galv.

VC9201

Ruota telescopica semplice
Telescopic jockey wheel

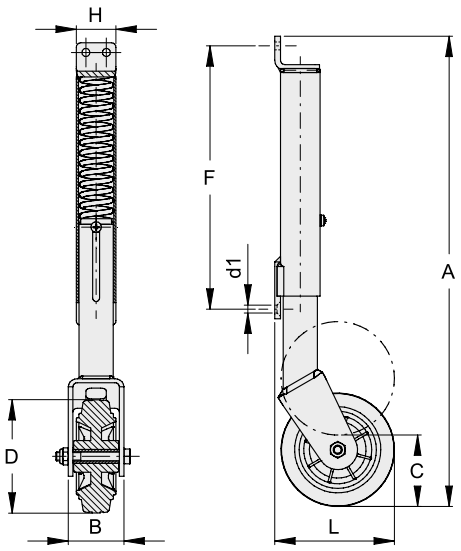

COD.	ART.	D	H	B	A	C	L	F	d1	Kg		FINITURA
VC9201.100	755.100	100	35	43	351-414	63	105.5	232.5	7	80	1	zinc./galv.
VC9201.125	755.125	125	50	50	440-507	67	131	298	9	250	2	zinc./galv.

VC9202

Ruota telescopica regolabile
Adjustable telescopic jockey wheel

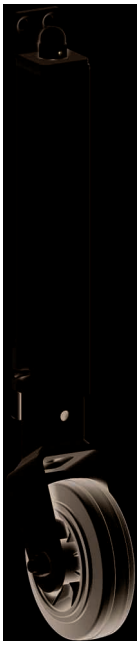

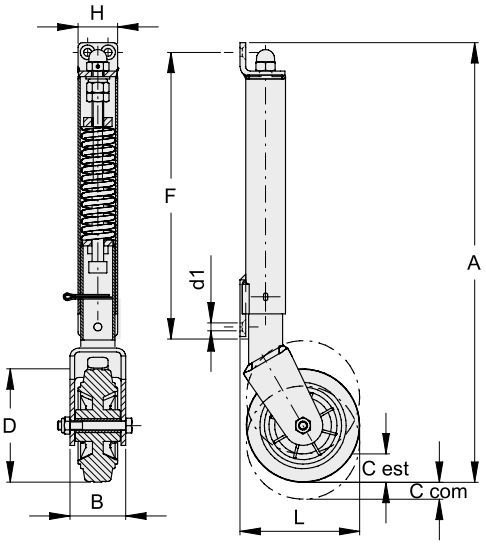

COD.	ART.	D	H	B	A	Cest	Ccom	L	F	d1	Kg		FINITURA
VC9202.100	750.100	100	35	43	387	25	15	106	242	7	80	1	zinc./galv.
VC9202.125	750.125	125	50	50	529	47	19.5	131	332	9	250	2	zinc./galv.

VC9301

Piastra forata per barre filettate
Drilled plate for threaded rods

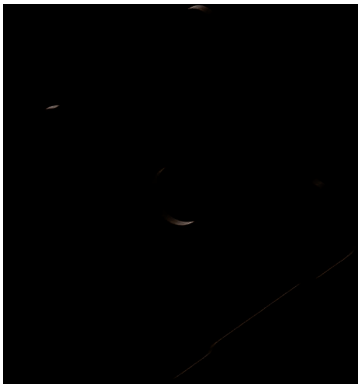

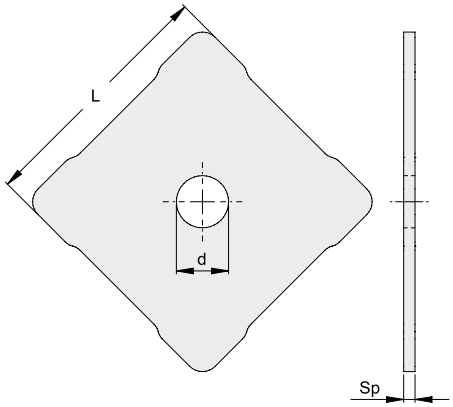

COD.	ART.	L	Sp	d		FINITURA
VC9301.018	271.18	90x90	4	18.5	10	zinc./galv.
VC9301.022	271.22	110x110	5	23	10	zinc./galv.
VC9301.027	271.27	130x130	5	28	6	zinc./galv.

VC9302

Piastra forata e decorata per barre filettate
Decorated drilled plate for threaded rods

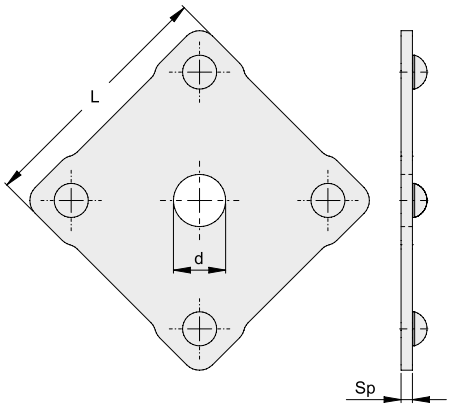

COD.	ART.	L	Sp	d		FINITURA
VC9302.018	272.18	90x90	4	18.5	10	zinc./galv.
VC9302.022	272.22	110x110	5	23	10	zinc./galv.
VC9302.027	272.27	130x130	5	28	6	zinc./galv.

ACCESSORI PER CANCELLI AUTOPORTANTI

Accessories for cantilever systems

Tutte le misure sono espresse in mm dove non diversamente specificato.
All measurements are in mm unless otherwise specified.

Esempi di applicazione
Examples of application

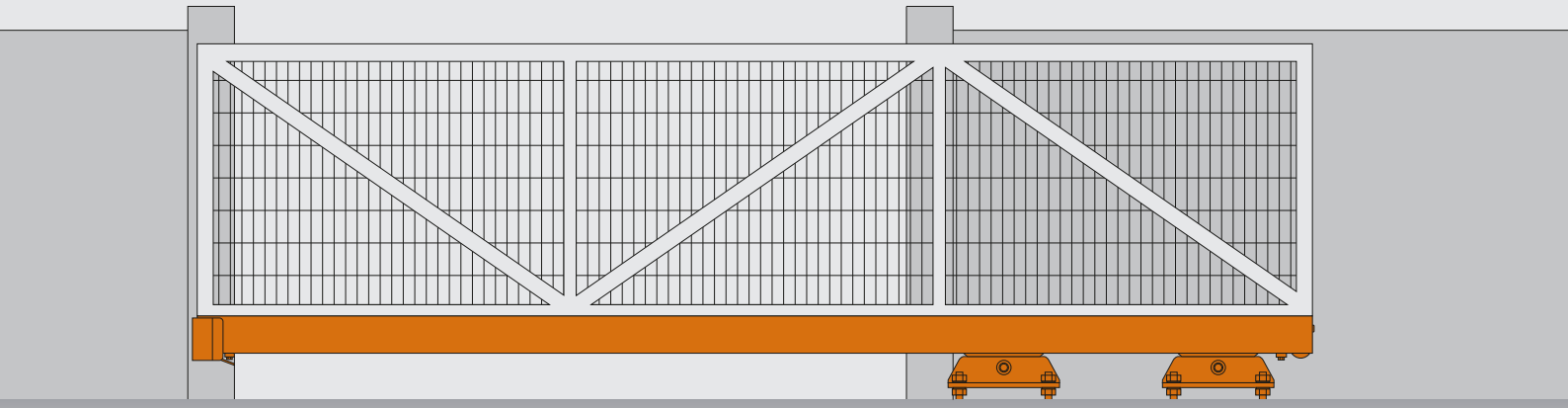

Carico uniforme
Uniform load

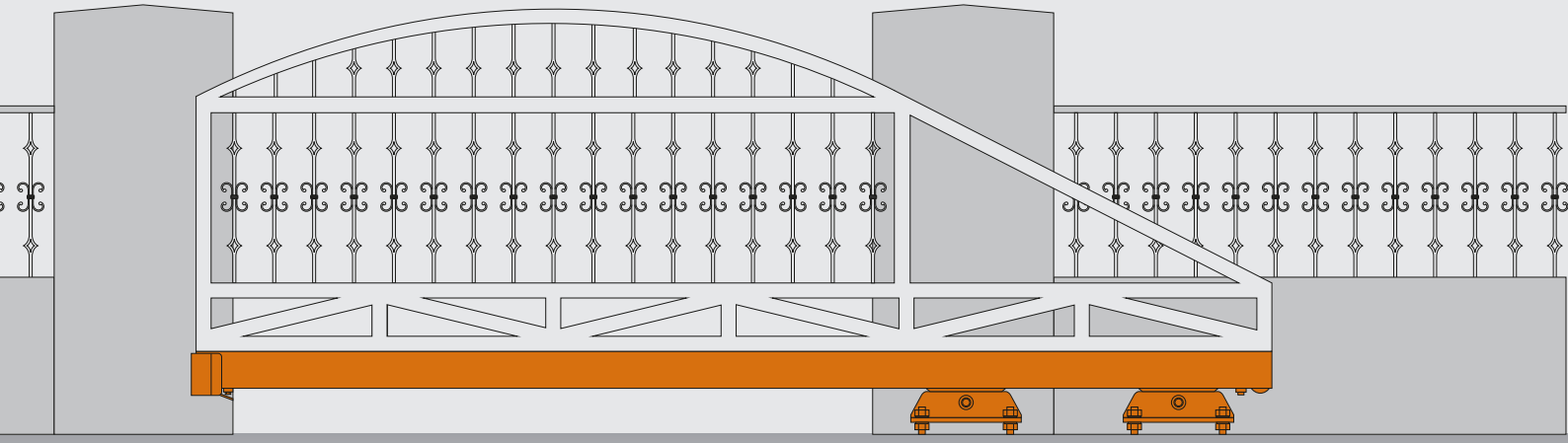

Carico non uniforme
Not uniform load

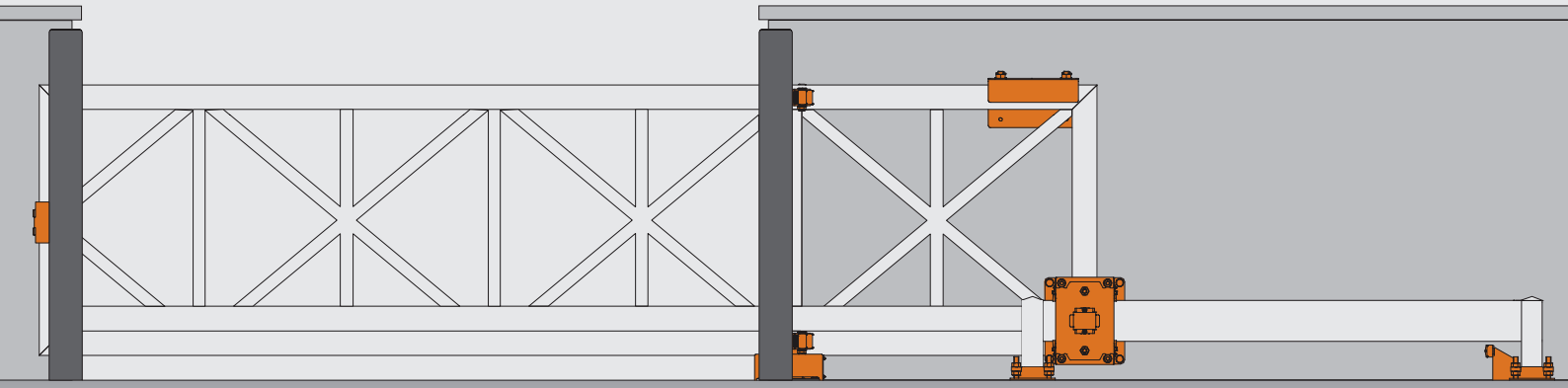

Cancello Guardian
Guardian gate

SERIE 800 | 900S

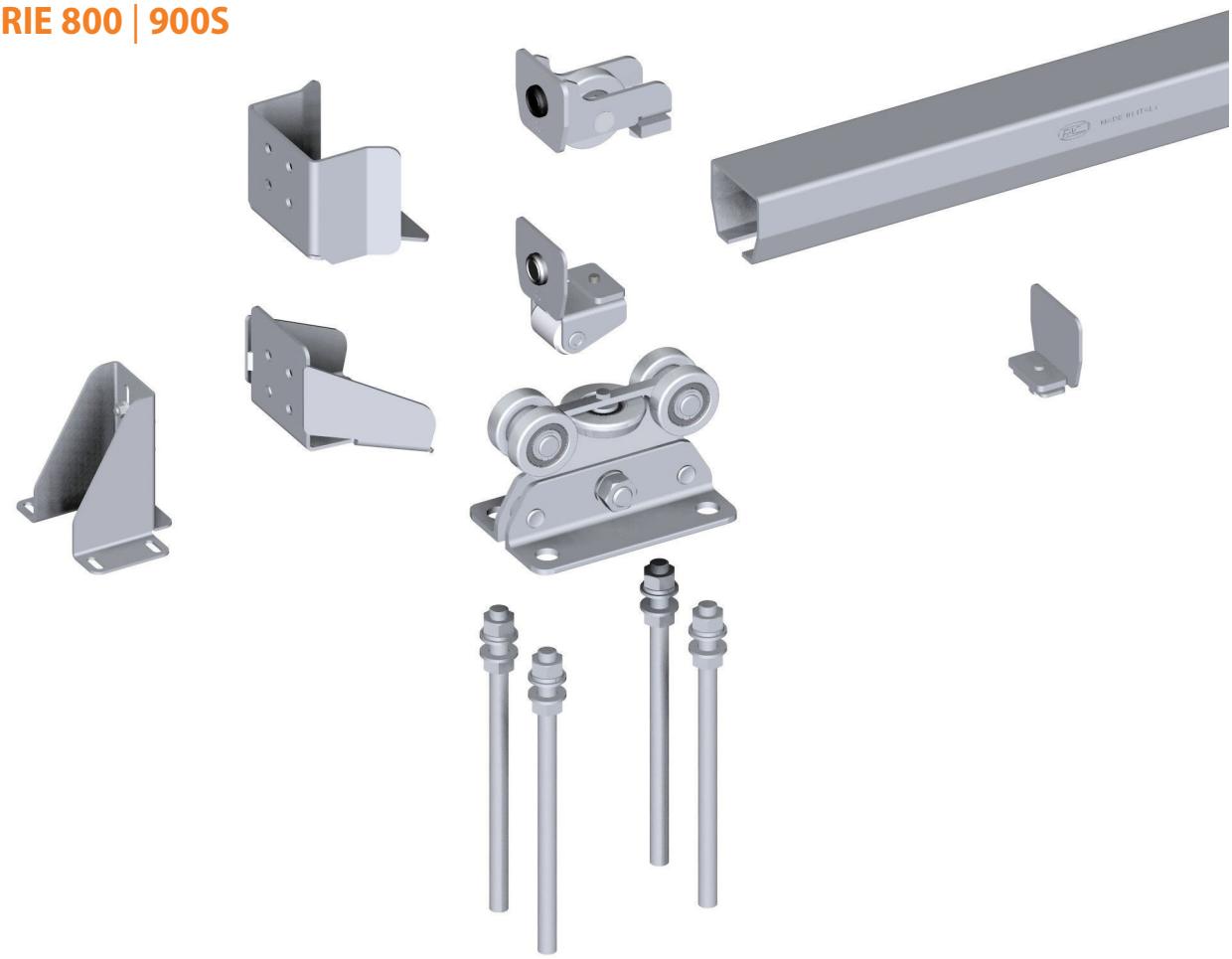

SERIE 1000 | 2000S

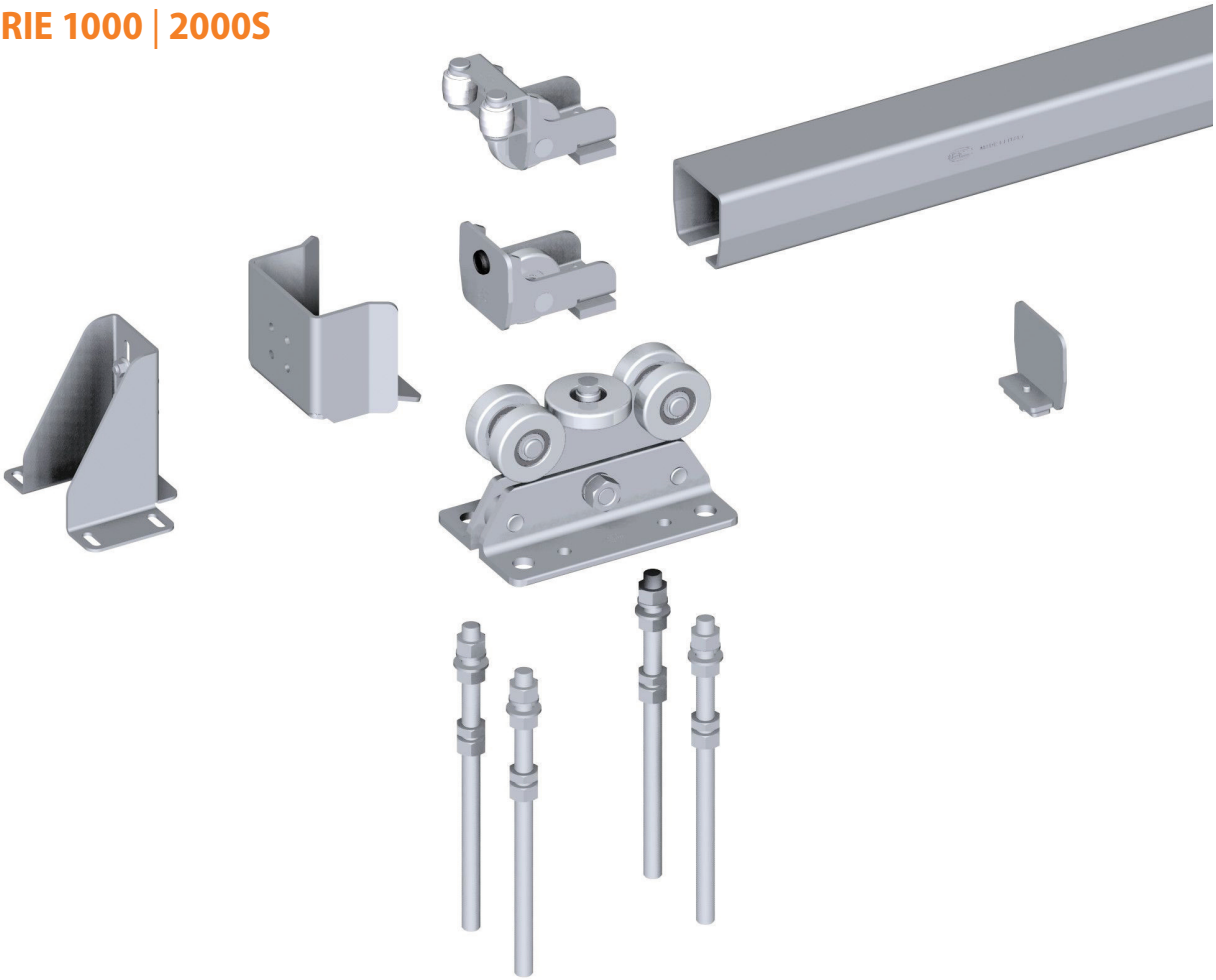

SERIE 3000L

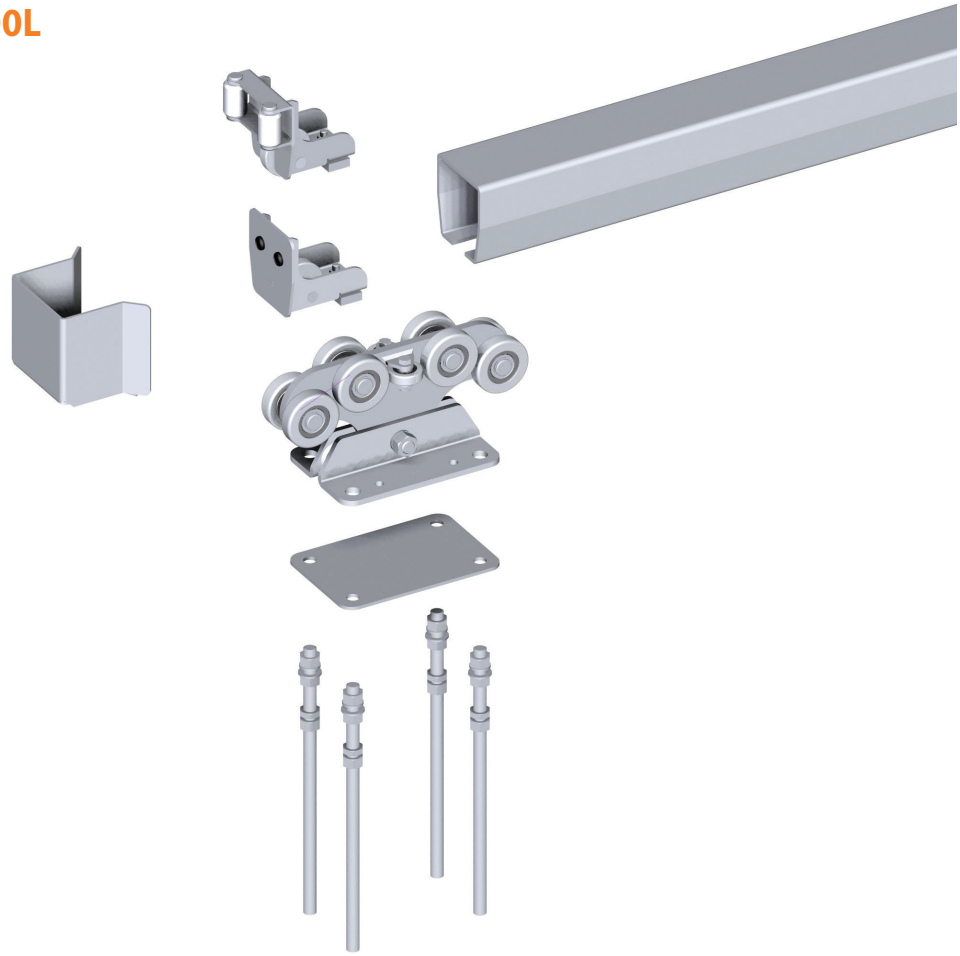

SERIE 3000

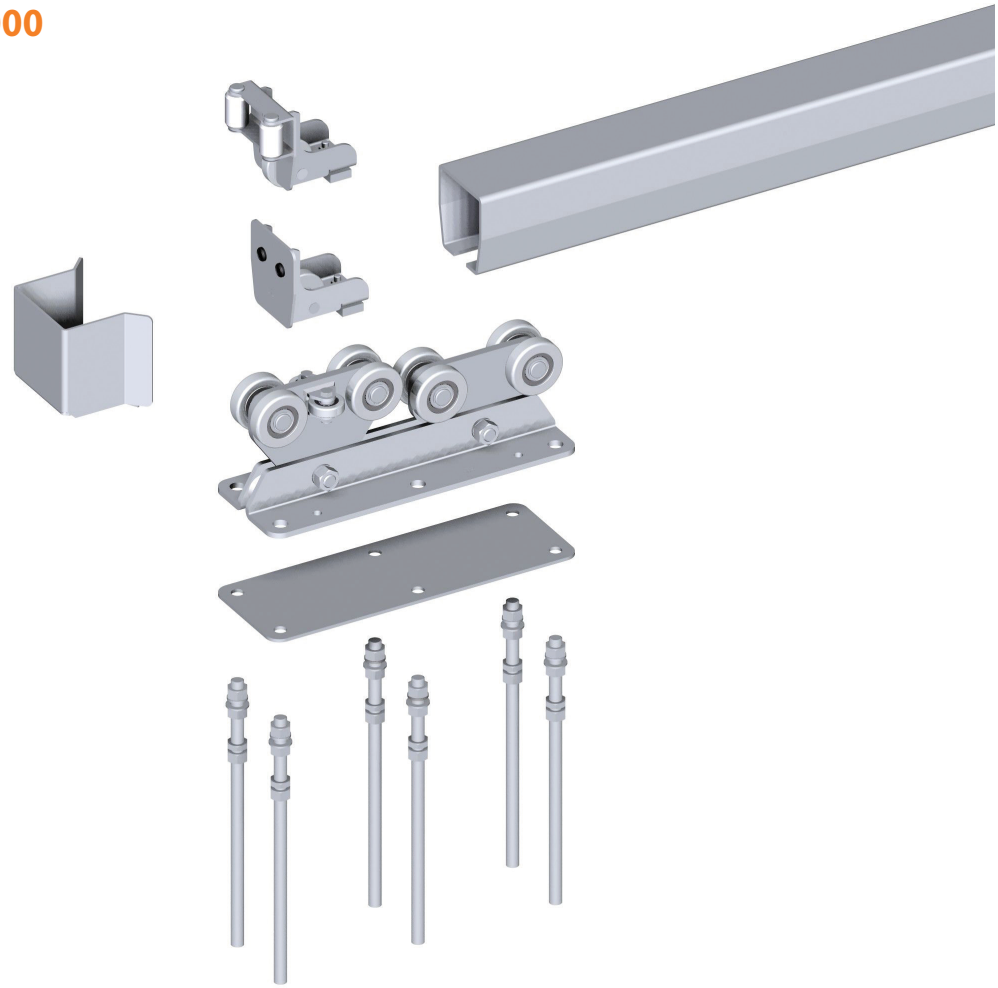

VD1100

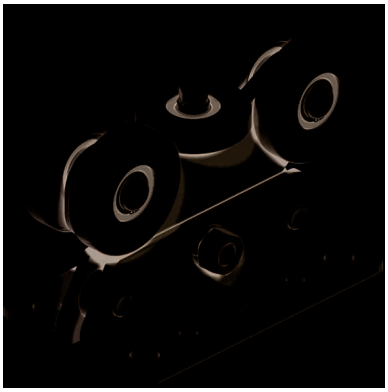

Carrello guida per cancello autoportante
Trolley for cantilever gate

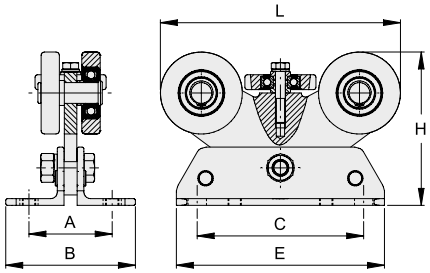

	COD.	ART.	A	B	C	E	H	L		FINITURA
NEW	VD1100.044	810	66.5	96.5	100	130	97.5	128	2	zinc./galv.
NEW	VD1100.053	910S	70	110.5	134	170	113	169.5	2	zinc./galv.
	VD1100.075	1010	100	156	200	250	157.5	235	2	zinc./galv.
NEW	VD1100.100	2010S	100	156	200	250	184	288.5	2	zinc./galv.
NEW	VD1100.053.I	1910S	70	110.5	134	170	113	169.5	2	inox
	VD1100.075.I	11010	100	150	200	250	157.5	235	2	inox

VD1101

Carrello guida per cancello autoportante serie 3000L
Trolley for cantilever gate 3000L series

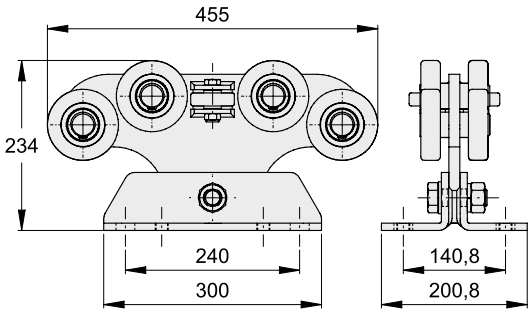

COD.	ART.		FINITURA
VD1101.140	3010L	1	zinc./galv.

VD1102

Carrello guida per cancello autoportante serie 3000
Trolley for cantilever gate 3000 series

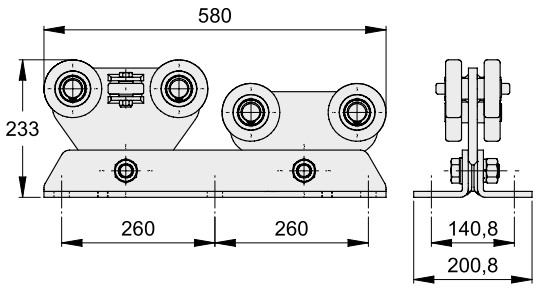

COD.	ART.		FINITURA
VD1102.140	3010	2	zinc./galv.

Migliori prestazioni
Best performance

VD1200

Ruota di estremità per cancello autoportante
Guide roller for cantilever gate

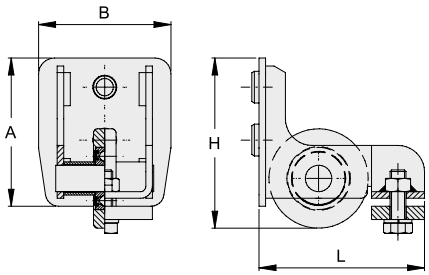

COD.	ART.	A	B	H	L		FINITURA
VD1200.053	920	60	70	76	97	2	zinc./galv.
VD1200.075	1020	84	92	104	125	2	zinc./galv.
VD1200.100	2020	112	100	130	125	2	zinc./galv.
VD1200.140	3020	152	140	172	156	2	zinc./galv.
VD1200.053.I	1920	60	70	76	97	2	inox
VD1200.075.I	11020	84	92	104	125	2	inox

VD1201

Ruota di estremità autocentrante per cancello autoportante
Self-centering guide roller for cantilever gate

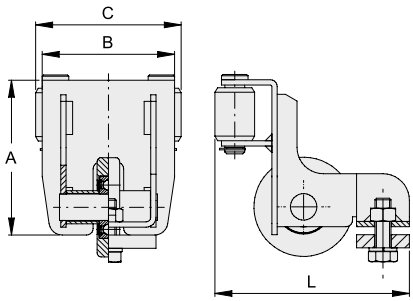

COD.	ART.	A	B	C	L		FINITURA
VD1201.075	1021	89	94	104	148	2	zinc./galv.
VD1201.100	2021	117	100	110	147	2	zinc./galv.
VD1201.140	3021	150.5	140	152	186	2	zinc./galv.

Migliori prestazioni
Best performance

VD1202

Frontalino per cancello autoportante
Front cover for cantilever gate

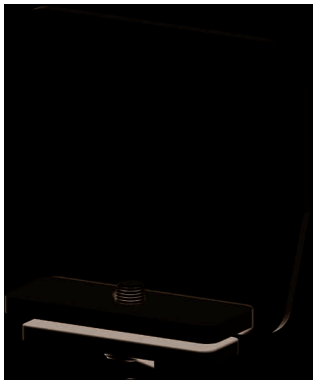

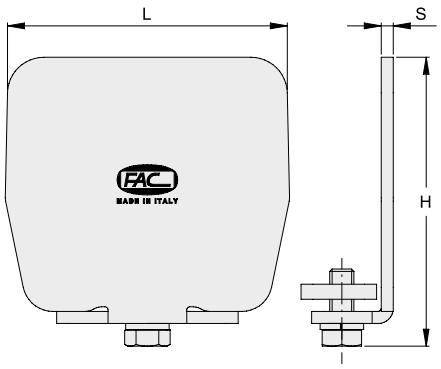

COD.	ART.	H	L	S		FINITURA
VD1202.053	925	69.5	70	3	10	zinc./galv.
VD1202.075	1025	94.5	94	4	10	zinc./galv.
VD1202.100	2025	122.5	100	4	8	zinc./galv.
VD1202.053.I	1925	69.5	70	3	10	inox
VD1202.075.I	11025	94.5	94	4	10	inox

VD1203 NEW

Ruota di estremità con frontalino
Guide roller with front cover

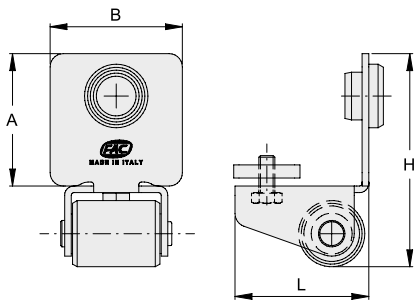

COD.	ART.	A	B	L	H		FINITURA
VD1203.044	823	50	50	50	80	2	zinc./galv.
VD1203.053	923	60	70	59	96	1	zinc./galv.

VD1300

Battente per cancello autoportante
End stop for cantilever gate

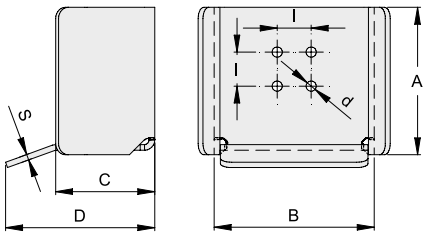

COD.	ART.	A	B	C	D	S	I	d		FINITURA
VD1300.053	930	89	97	69	104	3	30	9	2	zinc./galv.
VD1300.075	1030	120	131	87	126	5	30	9	2	zinc./galv.
VD1300.100	2030	130	141	87	131	5	30	9	2	zinc./galv.
VD1300.140	3030	170	181	125	169	5	-	-	2	zinc./galv.
VD1300.053.I	1930	90	99	70	105	4	30	9	2	inox
VD1300.075.I	11030	120	131	87	126	5	30	9	2	inox

VD1301

Battente per ruota di estremità autocentrante
End stop for self-centering guide roller

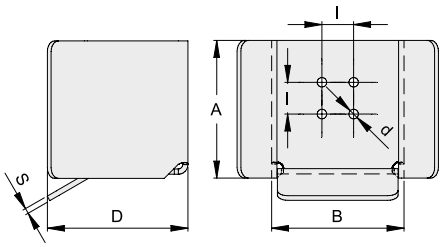

COD.	ART.	A	B	D	S	I	d		FINITURA
VD1301.100	2031	130	125	133	5	30	9	2	zinc./galv.
VD1301.140	3031	166	170	152	5	-	-	2	zinc./galv.

Migliori prestazioni
Best performance

VD1303 NEW

Battente autocentrante
Self-centering end stop

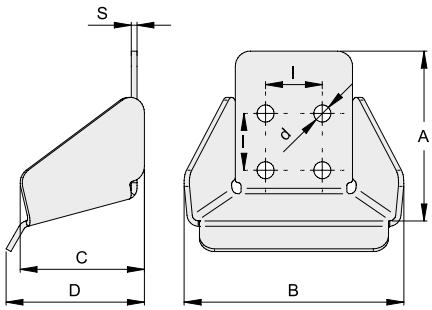

COD.	ART.	A	B	C	D	I	S	d		FINITURA
VD1303.044	833	90	116	66	73	30	3	9	1	zinc./galv.

VD1403

Monorotaia per cancello autoportante 3 m.
Rail for cantilever gate 3 m.

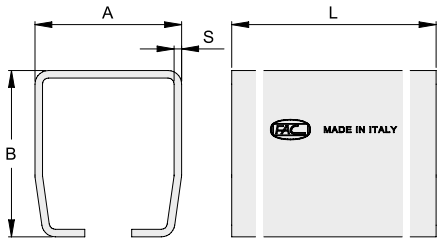

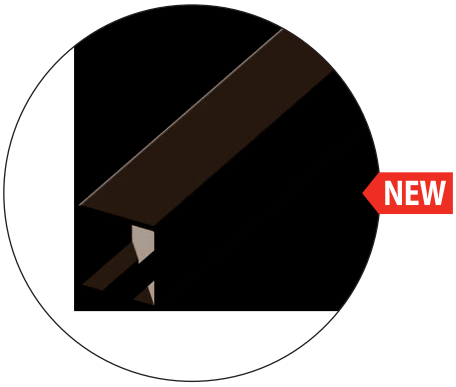

	COD.	ART.	A	B	S	L(m)		FINITURA
NEW	VD1403.044	P.44Z3	50	50	3	3	1	zinc./galv.
	VD1403.053	P.53M Z3	70	60	3.5	3	1	zinc./galv.
	VD1403.075	P.75MZ3	92	84	4	3	1	zinc./galv.
	VD1403.100	P.100LMZ3	97	110	5	3	1	zinc./galv.
	VD1403.140	P.140Z3	140	152	7	3	1	zinc./galv.
	VD1403.053.I	P.53/3inox	69	59	3	3	1	inox
	VD1403.075.I	P.75/3inox	92	84	4	3	1	inox
NEW	VD1403.044.L	P.44/3	50	50	3	3	1	lucido/black
	VD1403.053.L	P.53M/3	70	60	3.5	3	1	lucido/black
	VD1403.075.L	P.75M/3	92	84	4	3	1	lucido/black
	VD1403.100.L	P.100LM/3	97	100	5	3	1	lucido/black
	VD1403.140.L	P.140/3	140	152	7	3	1	lucido/black

VD1406

Monorotaia per cancello autoportante 6 m.
Rail for cantilever gate 6 m.

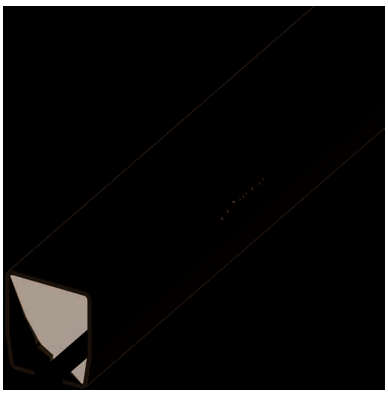

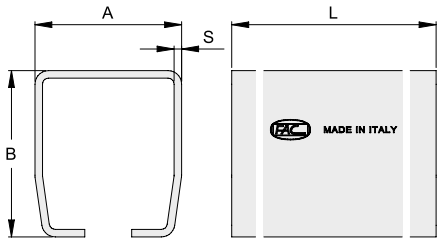

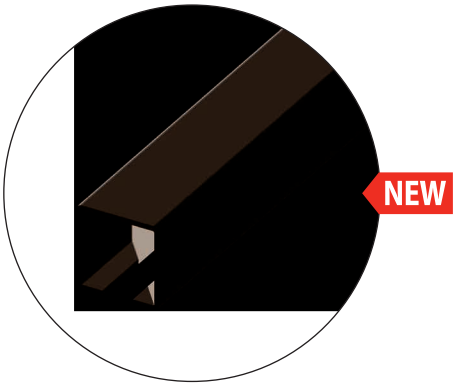

	COD.	ART.	A	B	S	L(m)		FINITURA
NEW	VD1406.044	P.44Z	50	50	3	6	1	zinc./galv.
	VD1406.053	P.53MZ	70	60	3.5	6	1	zinc./galv.
	VD1406.075	P.75MZ	92	84	4	6	1	zinc./galv.
	VD1406.100	P.100LMZ	97	110	5	6	1	zinc./galv.
	VD1406.140	P.140Z	140	152	7	6	1	zinc./galv.
	VD1406.053.I	P.53inox	69	59	3	6	1	inox
	VD1406.075.I	P.75inox	92	84	4	6	1	inox
NEW	VD1406.044.L	P.44	50	50	3	6	1	lucido/black
	VD1406.053.L	P.53M	70	60	3.5	6	1	lucido/black
	VD1406.075.L	P.75M	92	84	4	6	1	lucido/black
	VD1406.100.L	P.100LM	97	110	5	6	1	lucido/black
	VD1406.140.L	P.140	140	152	7	6	1	lucido/black

VD1501

Maschera forata di fissaggio a 4 fori per carrelli autoportati
4 holes drilled template for cantilever trolleys

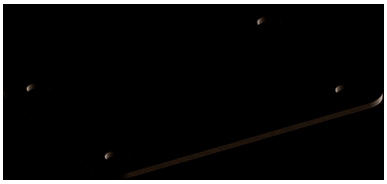

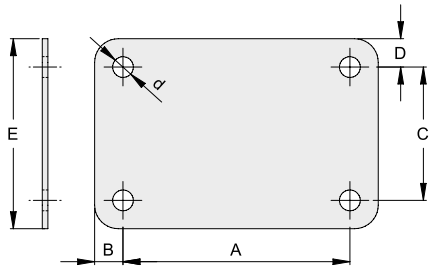

COD.	ART.	A	B	C	D	E	d		FINITURA
VD1501.018	2050	200	50	100	25	150	18	2	zinc./galv.
VD1501.022	3050L	240	30	141	30	201	26	2	zinc./galv.
VD1501.018.I	12050	200	50	100	25	150	18	2	inox

VD1502

Maschera forata di fissaggio a 6 fori per carrello serie 3000
6 holes drill template for 3000 series trolley

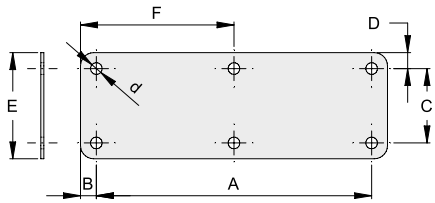

COD.	ART.	A	B	C	D	E	F	d		FINITURA
VD1502.022	3050	520	30	140.5	30	200.5	290	26	2	zinc./galv.

VD1600

Supporto per battente
End stop support

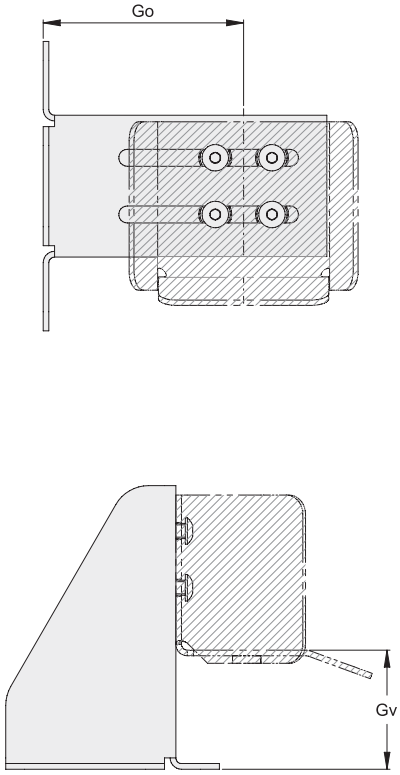

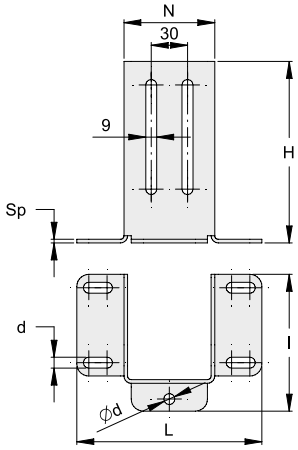

COD.	ART.	H	l	L	N	Sp	d		FINITURA
VD1600.053	935	150	113	153	75	3	9	2	zinc./galv.
VD1600.100	1035	210	150	177	92	5	11	2	zinc./galv.

COD.	ART.	VD1600.053		VD1600.100	
		Go	Gv	Go	Gv
VD1300.053	930	62÷119	16÷68	-	-
VD1300.075	1030	80÷119	18÷68	80÷176	18÷128
VD1300.100	2030	-	-	85÷176	20÷110
VD1301.100	2031	-	-	85÷176	20÷110

Questo articolo viene fornito a parte.
This item is supplied separately.

VD1700 NEW

Tirante di registrazione
Tie rod bolt

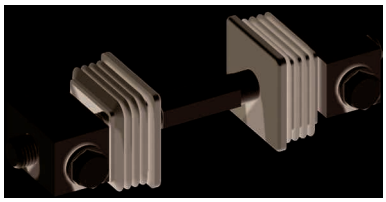

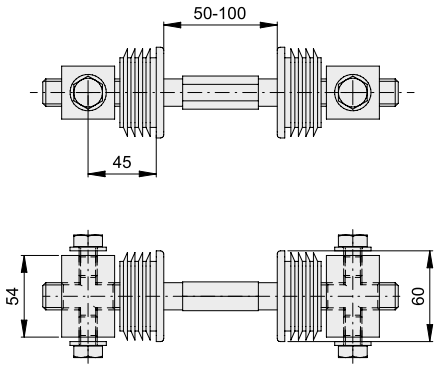

COD.		FINITURA
VD1700.060	1	zinc./galv.

VD1701

Kit 4 tiranti di ancoraggio e regolazione
Kit 4 fixing bolts

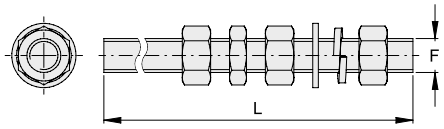

COD.	ART.	L	F		FINITURA
VD1701.012	840	200	M12	1	zinc./galv.
VD1701.014	940	250	M14	1	zinc./galv.
VD1701.018	1040	330	M18	1	zinc./galv.
VD1701.022	3040L	500	M22	1	zinc./galv.
VD1701.014.I	1940	250	M14	1	inox
VD1701.018.I	11040	330	M18	1	inox

VD1702

Kit 6 tiranti di ancoraggio e regolazione
Kit 6 fixing bolts

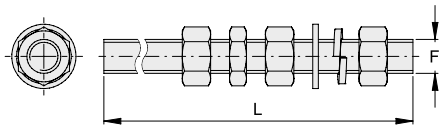

COD.	ART.	L	F		FINITURA
VD1702.022	3040	500	M22	1	zinc./galv.

Kit autoportante Serie 800

Series 800 - Cantilever system kit

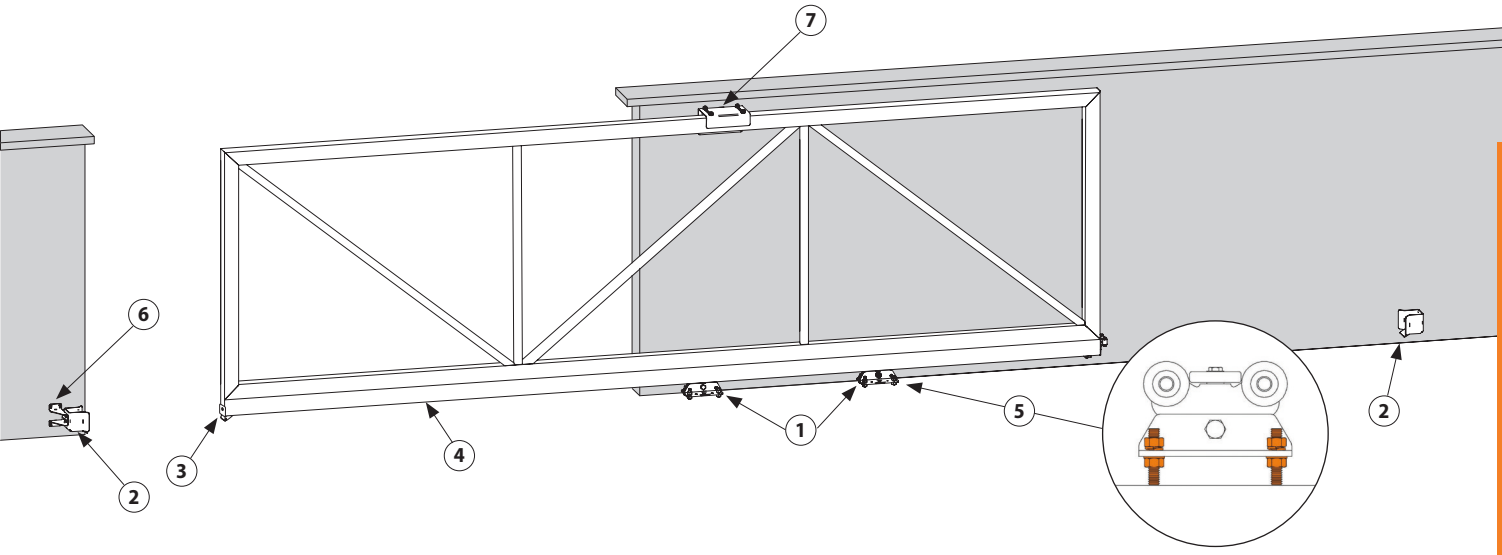

Elenco parti Components list

Opzionale Optional

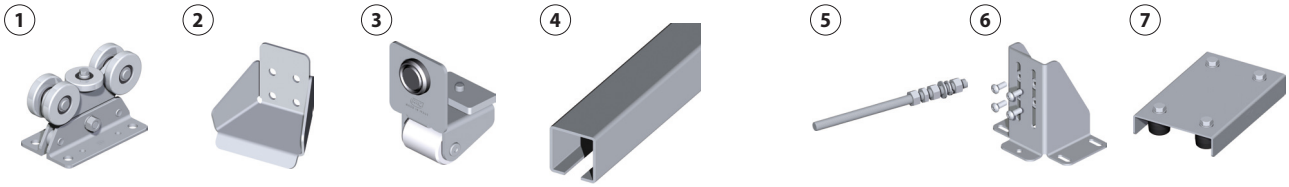

1	2	3	4	5	6	7
VD1100.044	VD1303.044	VD1203.044	VD1403.044 VD1406.044	VD1701.012	VD1600.053	VA3202.N34

I Kit non comprendono i tiranti di ancoraggio
Kits do not includ anchor bolts

KD1102.044 NEW

Kit Serie 800, 2 rotaie 3 m. nere / Series 800 kit, 2 black rails 3 m.

COD.	ART.	DESCRIZIONE - DESCRIPTION	
VD1403.044.L	P.44/3	Monorotaia nera da 3 m tipo mini / Black rail-3 m.	2
VD1100.044	810	Carrello guida cancello per serie mini / Trolley with rocker for mini series	2
VD1203.044	823	Ruota di estremità per tipo mini / Self-centering guide roller	1
VD1303.044	833	Battente autocentrante / Self-centering end stop	1

KD1103.044 NEW

Kit Serie 800, 2 rotaie 3 m. zinc. / Series 800 kit, 2 galvanized rails 3 m.

COD.	ART.	DESCRIZIONE - DESCRIPTION	
VD1403.044	P.44Z3	Monorotaia zincata da 3 m. tipo mini / Galvanized rail-3 m.	2
VD1100.044	810	Carrello guida cancello per serie mini / Trolley with rocker for mini series	2
VD1203.044	823	Ruota di estremità per tipo mini / Self-centering guide roller	1
VD1303.044	833	Battente autocentrante / Self-centering end stop	1

KD1100.044 NEW

Kit Serie 800, 1 rotaia 6 m. nera / Series 800 kit, 1 black rail 6 m.

COD.	ART.	DESCRIZIONE - DESCRIPTION	
VD1406.044.L	P.44	Monorotaia nera da 6 m. tipo mini / Black rail-6 m.	1
VD1100.044	810	Carrello guida cancello per serie mini / Trolley with rocker for mini series	2
VD1203.044	823	Ruota di estremità per tipo mini / Self-centering guide roller	1
VD1303.044	833	Battente autocentrante / Self-centering end stop	1

KD1101.044 NEW

Kit Serie 800, 1 rotaia 6 m. zinc. / Series 800 kit, 1 galvanized rail 6 m.

COD.	ART.	DESCRIZIONE - DESCRIPTION	
VD1406.044	P.44Z	Monorotaia zincata da 6 m. tipo mini / Galvanized rail-6 m.	1
VD1100.044	810	Carrello guida cancello per serie mini / Trolley with rocker for mini series	2
VD1203.044	823	Ruota di estremità per tipo mini / Self-centering guide roller	1
VD1303.044	833	Battente autocentrante / Self-centering end stop	1

Tabella di carico orientativo
Cantilever systems general load table

A	Luce apertura	Overall opening
B	Spazio necessario per il battente di arresto	Length required to position the end stop
C	Distanza fra i centri dei carrelli	Distance between trolleys
D	Spazio necessario per la ruota di estremità	Length required to house the guide roller
F1 max	Carico massimo sopportabile dal carrello per lavorare in condizioni ottimali	Maximum acting load for trolleys best performance
G min	Luce minima sotto la rotaia	Minimum gate height
P max CUn	Peso totale del portone in opera (comprensivo di tutti gli accessori) con carico uniforme	Total gate weight (including all accessories) considering an uniform load
P max NUn	Peso totale del portone in opera (comprensivo di tutti gli accessori) con carico NON uniforme (coda scaricata)	Total gate weight (including all accessories) with UNEVEN load
P telaio	Peso per metro lineare del portone in opera senza accessori FAC (tratto S con carico uniforme e tratto A con carico NON uniforme)	Total linear weight per meter (NOT considering FAC Accessories, note; considering side S with an uniform load and side A without a uniform load)
S	Lunghezza totale del portone	Total gate length
T, U, H	Dimensioni del basamento di cemento	Suggested basement dimensions
Z min CUn	Peso minimo del basamento per cancello a carico uniforme	Minimum basement weight for uniform gate's load
Z min NUn	Peso minimo del basamento per cancello a carico NON uniforme	Minimum basement weight for NOT uniform gate's load

Serie 800

fino a 4 m. - peso max cancello: 300 kg /up to 4 m. - max gate's weight: 300 kg

A (m)	C (m)	S (m)	P max CUn (kg)	Z min CUn (kg)	P max NUn (kg)	Z min NUn (kg)	P telaio (kgxML)	T min (m)	U min (m)	H min (m)
2	0,8	3,1	300	560	220	730	85	1,3	0,4	0,5
3	1,2	4,5	300	560	220	730	60	1,7	0,4	0,5
4	1,6	5,9	300	560	220	730	45	2,1	0,4	0,5

dati costanti/fixed data:
F1 max (kg): 500
D (m): 0,115
B (m): 0,070
G min (m): 0,05
E min (m): 0,25
A/C = 2,5

Serie 900S

fino a 6 m. - peso max cancello: 450 kg /up to 6 m. - max gate's weight: 450 kg

A (m)	C (m)	S (m)	P max CUn (kg)	Z min CUn (kg)	P max NUn (kg)	Z min NUn (kg)	P telaio (kgxML)	T min (m)	U min (m)	H min (m)
3	1,2	4,7	450	900	350	1200	85	1,8	0,5	0,5
4	1,6	6,1	450	900	350	1200	65	2,2	0,5	0,5
5	2,0	7,5	450	900	350	1200	50	2,6	0,5	0,5
6	2,4	8,9	450	900	350	1200	42	3	0,5	0,5

dati costanti/fixed data:
F1 max (kg): 800
D (m): 0,195
B (m): 0,110
G min (m): 0,06
E min (m): 0,30
A/C = 2,5

Serie 1000

fino a 8 m. - peso max cancello: 600 kg /up to 8 m. - max gate's weight: 600 kg

A (m)	C (m)	S (m)	P max CUn (kg)	Z min CUn (kg)	P max NUn (kg)	Z min NUn (kg)	P telaio (kgxML)	T min (m)	U min (m)	H min (m)
4	1,6	6,2	600	1200	450	1600	85	2,3	0,6	0,6
5	2,0	7,6	600	1200	450	1600	65	2,7	0,6	0,6
6	2,4	9,0	600	1200	450	1600	55	3,1	0,6	0,6
8	3,2	11,8	600	1200	450	1600	40	3,9	0,6	0,6

dati costanti/fixed data:
F1 max (kg): 1000
D (m): 0,260
B (m): 0,115
G min (m): 0,08
E min (m): 0,35
A/C = 2,5

Serie 2000S

fino a 12 m. - peso max cancello: 1200 kg /up to 12 m. - max gate's weight: 1200 kg

A (m)	C (m)	S (m)	P max CUn (kg)	Z min CUn (kg)	P max NUn (kg)	Z min NUn (kg)	P telaio (kgxML)	T min (m)	U min (m)	H min (m)
6	2,4	9,1	1200	2300	900	3000	115	3,3	0,8	0,6
7	2,8	10,5	1200	2300	900	3000	95	3,7	0,8	0,6
8	3,2	11,9	1200	2300	900	3000	85	4,1	0,8	0,6
10	4,0	14,7	1200	2300	900	3000	65	4,9	0,8	0,6
12	4,8	17,5	1200	2300	900	3000	50	5,7	0,8	0,6

dati costanti/fixed data:
F1 max (kg): 2000
D (m): 0,290
B (m): 0,115
G min (m): 0,08
E min (m): 0,45
A/C = 2,5

Serie 3000/3000L

fino a 16 m. - peso max cancello: 1800 kg /up to 16 m. - max gate's weight: 1800 kg

A (m)	C (m)	S (m)	P max CUn (kg)	Z min CUn (kg)	P max NUn (kg)	Z min NUn (kg)	P telaio (kgxML)	T min (m)	U min (m)	H min (m)
8	3,2	12,2	1800	3700	1400	4700	118	4,4	1	0,8
10	4,0	15,0	1800	3700	1400	4700	90	5,2	1	0,8
12	4,8	17,8	1800	3700	1400	4700	72	6	1	0,8
14	5,6	20,6	1800	3700	1400	4700	58	6,8	1	0,8
16	6,4	23,5	1800	3700	1400	4700	48	7,6	1	0,8

dati costanti/fixed data:
F1 max (kg): 3200
D (m): 0,460
B (m): 0,155
G min (m): 0,10
E min (m): 0,60
A/C = 2,5

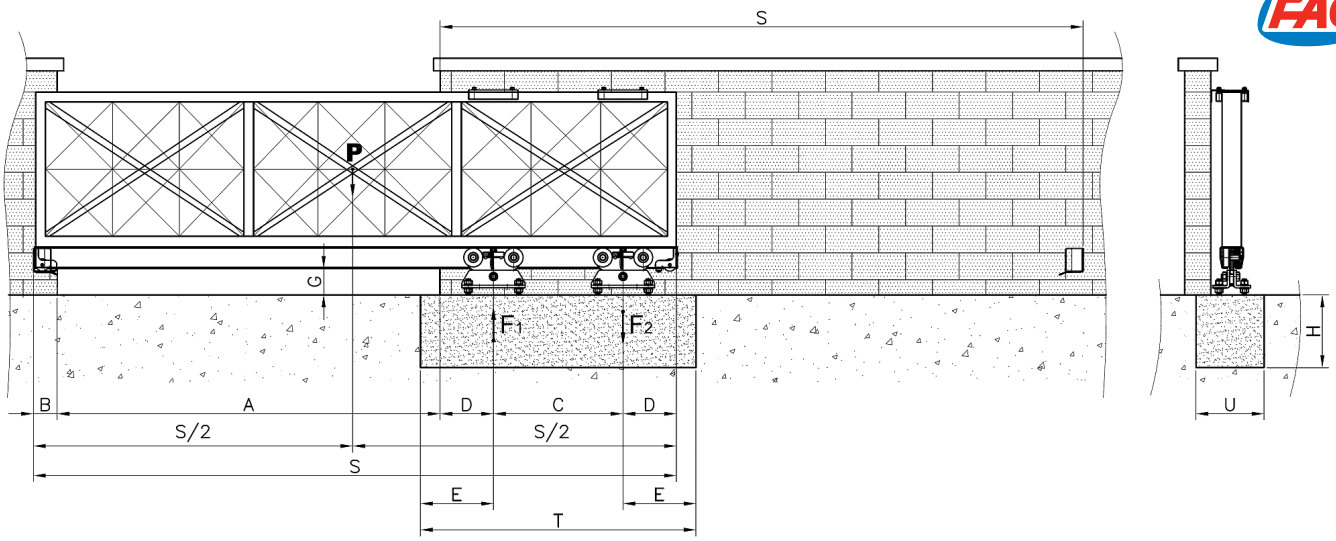

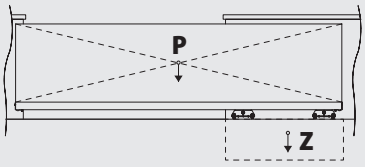

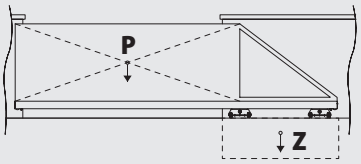

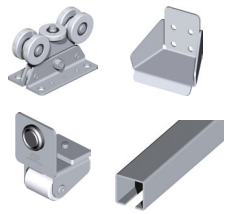

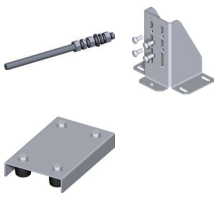

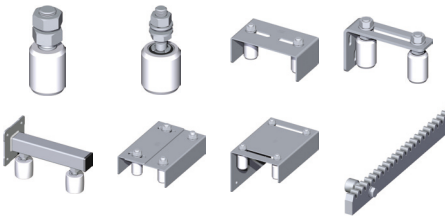

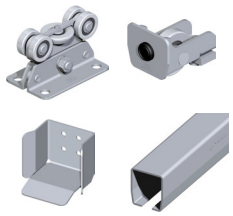

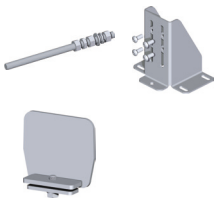

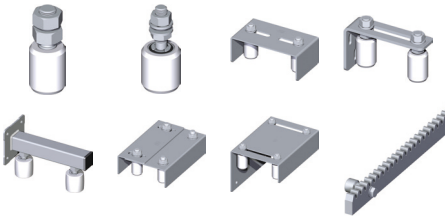

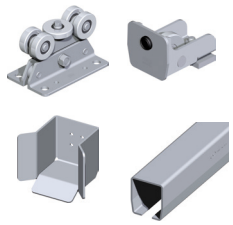

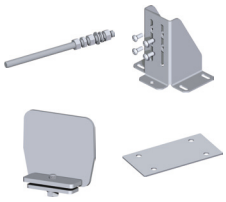

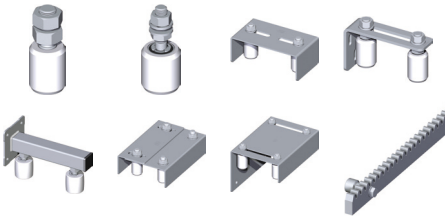

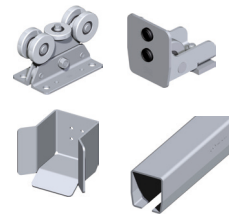

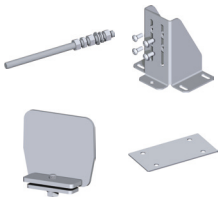

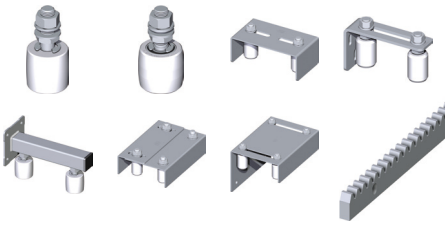

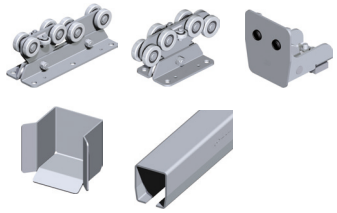

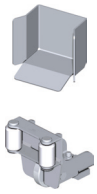

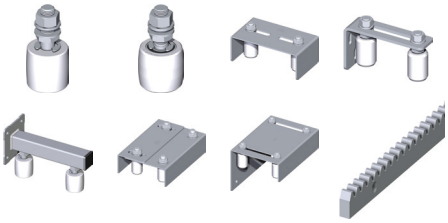

Carico uniforme
(peso di tutta la lunghezza S)

Uniform load
(weight of total lenght S)

Carico NON uniforme
(peso del tratto A)

NOT uniform load
(weight of Dimensions overall opening A)

Essenziale Essential

Opzionale Optional

Accessori complementari Complementary accessories

Essenziale Essential

Alternativa Alternative

Opzionale Optional

Accessori complementari Complementary accessories

Essenziale Essential

Alternativa Alternative

Opzionale Optional

Accessori complementari Complementary accessories

Essenziale Essential

Alternativa Alternative

Opzionale Optional

Accessori complementari Complementary accessories

Essenziale Essential

Alternativa
Alternative

Opzionale Optional

Accessori complementari Complementary accessories

INACCESSIBILE PER CARATTERE

INACCESSIBLE BY NATURE

Cancello autoportante Serie Guardian
Series Guardian - Cantilever system

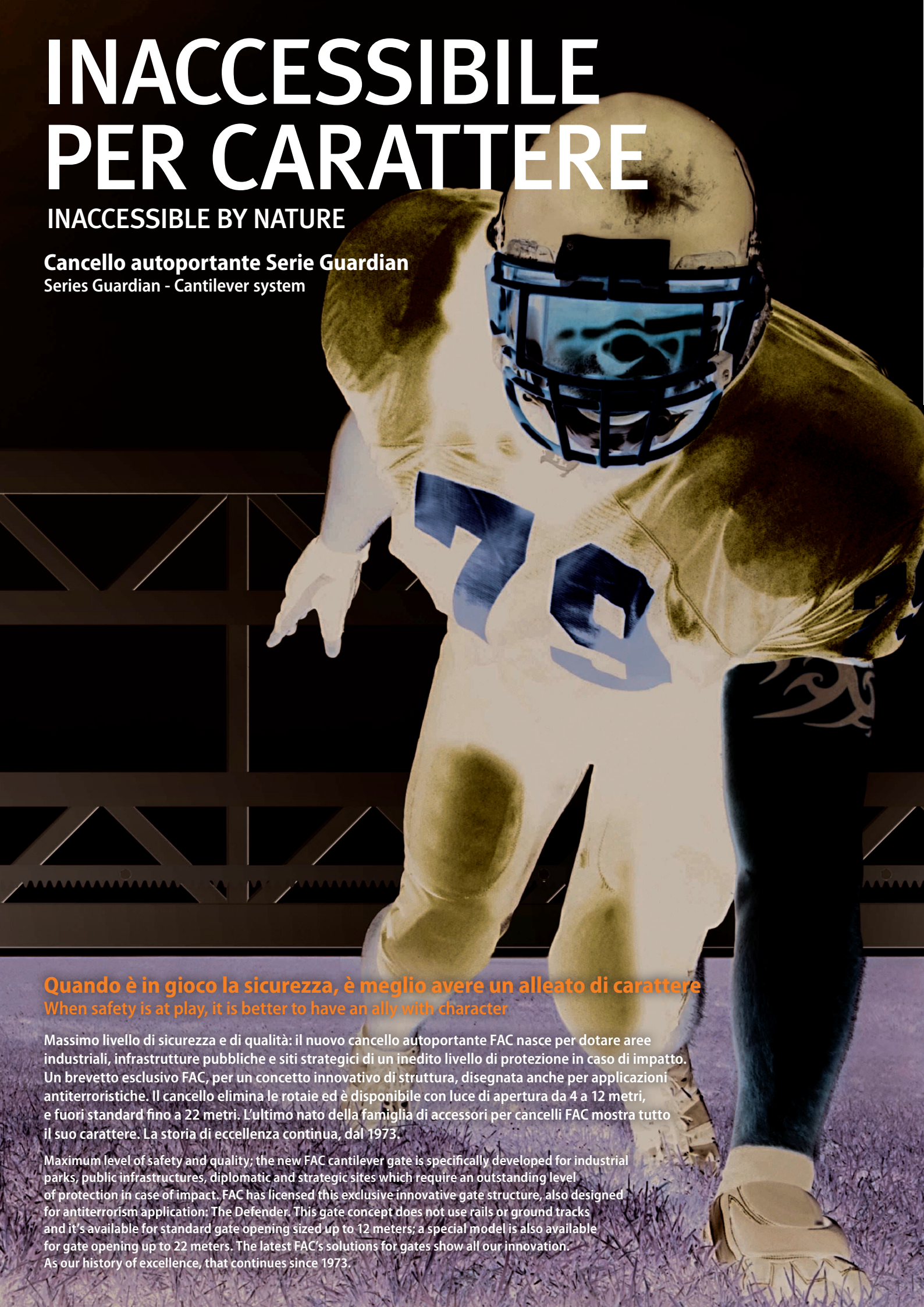

Quando è in gioco la sicurezza, è meglio avere un alleato di carattere
When safety is at play, it is better to have an ally with character

Massimo livello di sicurezza e di qualità: il nuovo cancello autoportante FAC nasce per dotare aree industriali, infrastrutture pubbliche e siti strategici di un inedito livello di protezione in caso di impatto. Un brevetto esclusivo FAC, per un concetto innovativo di struttura, disegnata anche per applicazioni antiterroristiche. Il cancello elimina le rotaie ed è disponibile con luce di apertura da 4 a 12 metri, e fuori standard fino a 22 metri. L'ultimo nato della famiglia di accessori per cancelli FAC mostra tutto il suo carattere. La storia di eccellenza continua, dal 1973.

Maximum level of safety and quality; the new FAC cantilever gate is specifically developed for industrial parks, public infrastructures, diplomatic and strategic sites which require an outstanding level of protection in case of impact. FAC has licensed this exclusive innovative gate structure, also designed for antiterrorism application: The Defender. This gate concept does not use rails or ground tracks and it's available for standard gate opening sized up to 12 meters; a special model is also available for gate opening up to 22 meters. The latest FAC's solutions for gates show all our innovation. As our history of excellence, that continues since 1973.

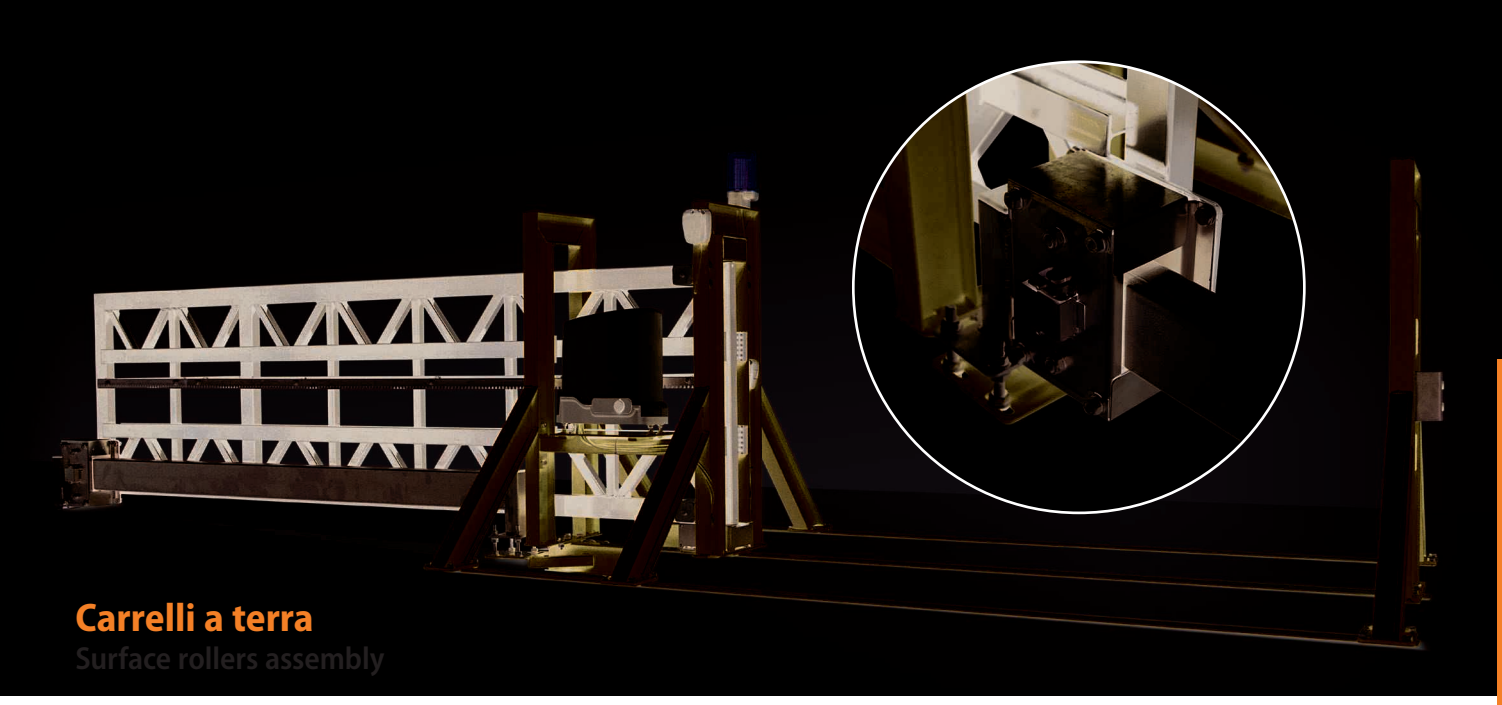

Carrelli a terra
Surface rollers assembly

VD2100 NEW

Carrello a terra per autoportante tipo Guardian
Surface roller assemply for Guardian type cantilever system

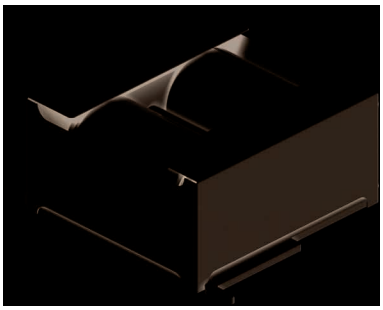

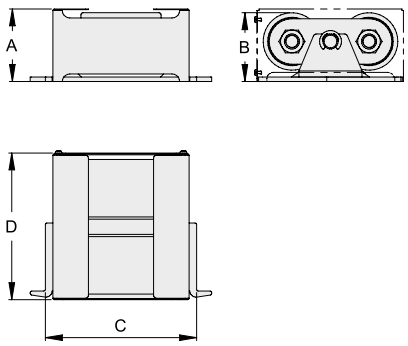

COD.	A	B	C	D		FINITURA
VD2100.100	64	60	140	170	1	zinc./galv.
VD2100.150	96	90	180	197	1	zinc./galv.

Carrelli posteriori
Back rollers assembly

VD2200 NEW

Carrello posteriore per autoportanti tipo Guardian
Back roller for Guardian type cantilever gates

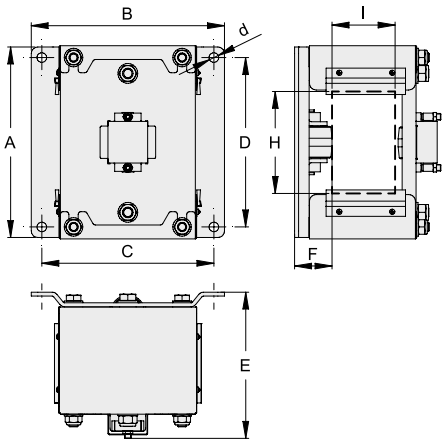

COD.	A	B	C	D	E	F	d	H	I		FINITURA
VD2200.100	206	191	171	186	135	39.5	10.5	96-104	47.5-52.5	1	zinc./galv.
VD2200.150	288	292	260	256	225	56.5	14.5	147-157	97-103	1	zinc./galv.

Battenti anteriori
Front strikes

VD2300 NEW

Battente anteriore
Front strike

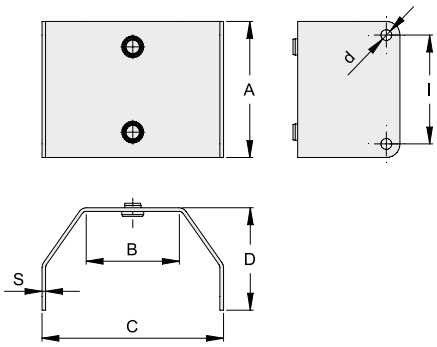

COD.	A	B	C	D	I	d	S		FINITURA
VD2300.100	80	63	140	80	56	10	3	1	zinc./galv.
VD2300.150	150	102	200	113	120	12	4	1	zinc./galv.

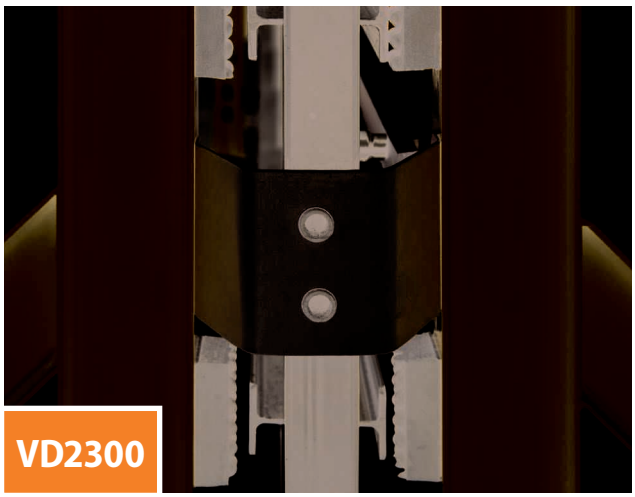

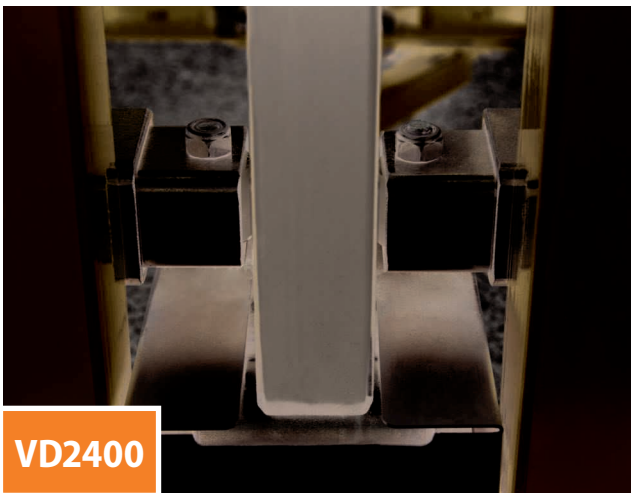

Olive guida
Guide rollers

VD2400 NEW

Oliva di guida regolabile
Adjustable guide roller

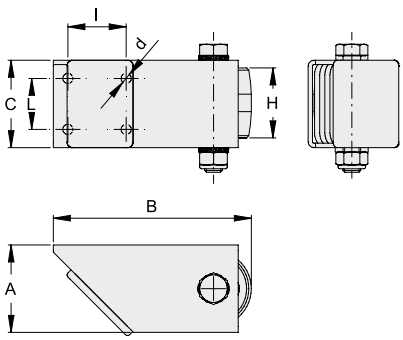

COD.	A	B	C	H	I	L	d		FINITURA
VD2400.I52	60	131-141	60	48	40	35	7	1	zinc./galv.
VD2400.N38	50	132-140	40	28	50	-	10	1	zinc./galv.

VD2500 NEW

Maschera fissaggio trave a terra
Tail guide template

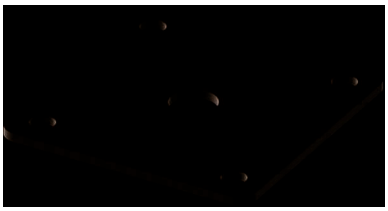

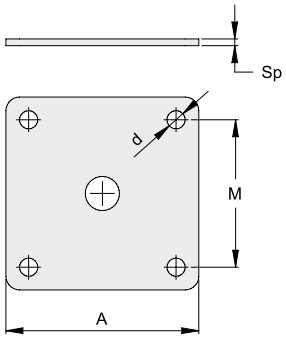

COD.	A	M	d	Sp		FINITURA
VD2500.100	110	80	14	5	1	zinc./galv.
VD2500.150	170	130	16	6	1	zinc./galv.

VD2501 NEW

Piastra di regolazione per trave a terra
Tail guide adjustament plate

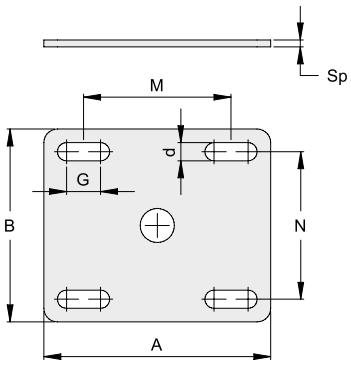

COD.	A	B	M	N	G	d	Sp		FINITURA
VD2501.100	140	110	80	80	30	14	5	1	zinc./galv.
VD2501.150	200	170	130	130	30	16	6	1	zinc./galv.

Tabella dimensionamento cancello autoportante Serie Guardian

Dimensioning table Series Guardian-Cantilever system

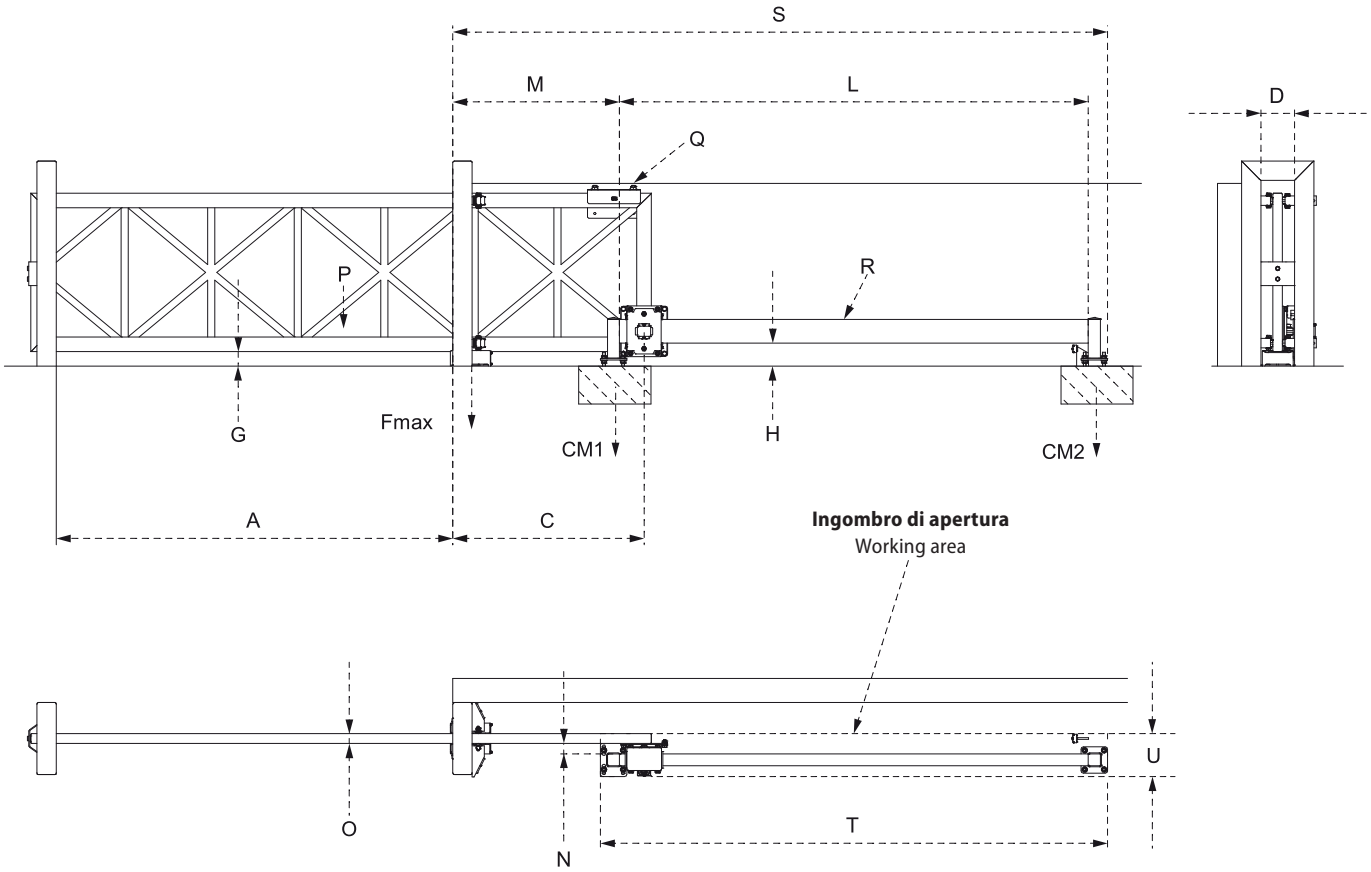

Dimensionamento Serie 100

Dimensioning Series 100

Gmin (m)	Hmin (m)	D (m)	N (mm)	O (mm)	U (m)	Fmax (kg)	Pmax (kg)	CM1min (kg)	CM2min (kg)
0,06	0,100	0,140	40	40 ÷ 80	0,2	950	500	1000	100

A (m)	C (m)	S min (m)	R (mm)	L (m)	M (m)	Q (art.)	T (m)
3	1,2	~4,4	100x50 sp. 3	3,22	1,1	-	3,5
3,5	1,4	~5,1	100x50 sp. 3	3,72	1,3	-	4
4	1,6	~5,8	100x50 sp. 3	4,22	1,5	-	4,5
4,5	1,8	~6,5	100x50 sp. 3	4,72	1,7	217 - 217L	5
5	2	~7,2	100x50 sp. 3	5,22	1,9	217 - 217L	5,5
5,5	2,2	~7,9	100x50 sp. 3	5,72	2,1	217 - 217L	6
6	2,4	~8,6	100x50 sp. 3	6,22	2,3	217 - 217L	6,5

Dimensionamento Serie 150

Dimensioning Series 150

Gmin (m)	Hmin (m)	D (m)	N (mm)	O (mm)	U (m)	Fmax (kg)	Pmax (kg)	CM1min (kg)	CM2min (kg)
0,09	0,175	0,200	60	60 ÷ 120	0,35	2700	1500	3000	300

A (m)	C (m)	S min (m)	R (mm)	L (m)	M (m)	Q (art.)	T (m)
6	2,4	~8,75	150x100 sp. 4	6,35	2,22	-	6,7
7	2,8	~10,15	150x100 sp. 4	7,35	2,62	-	7,7
8	3,2	~11,55	150x100 sp. 4	8,35	3,02	-	8,7
9	3,6	~12,95	150x100 sp. 4	9,35	3,42	218 - 218L	9,7
10	4	~14,35	150x100 sp. 5	10,35	3,82	218 - 218L	10,7
11	4,4	~15,75	150x100 sp. 5	11,35	4,22	218 - 218L	11,7
12	4,8	~17,15	150x100 sp. 5	12,35	4,62	218 - 218L	12,7

Kit autoportante Serie Guardian
Series Guardian-Cantilever system kit

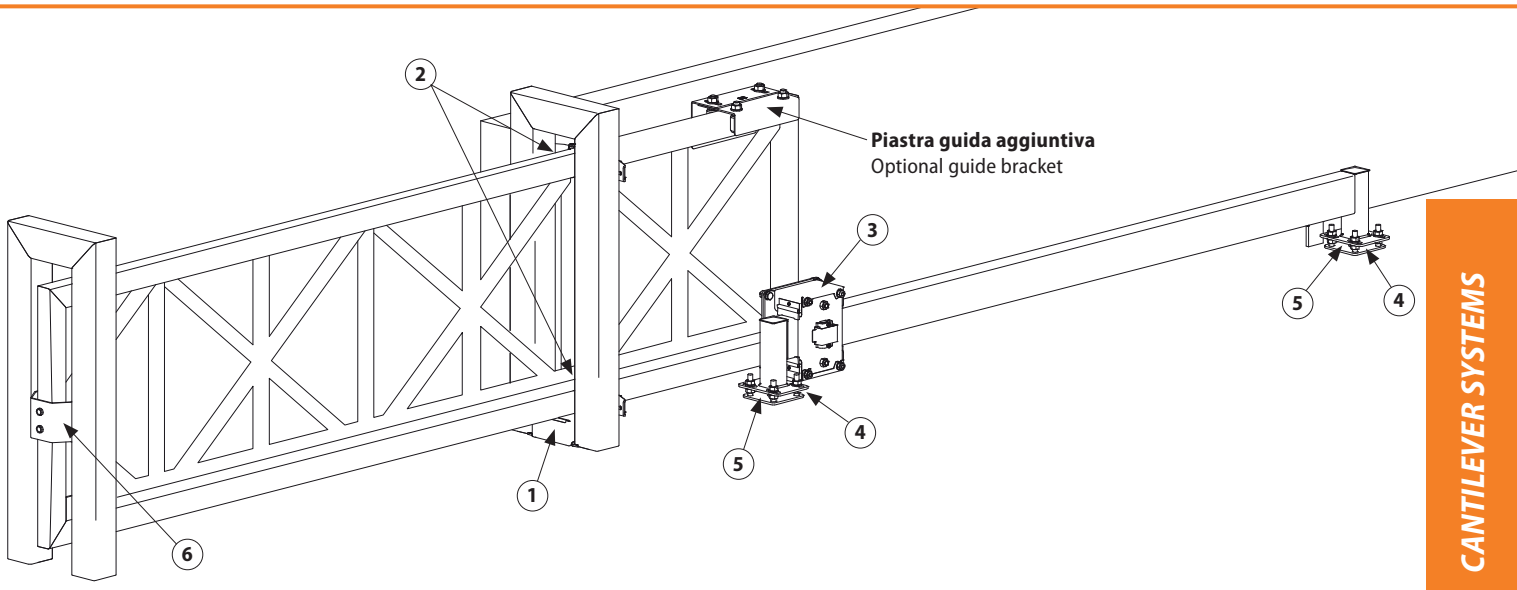

Elenco parti Component list

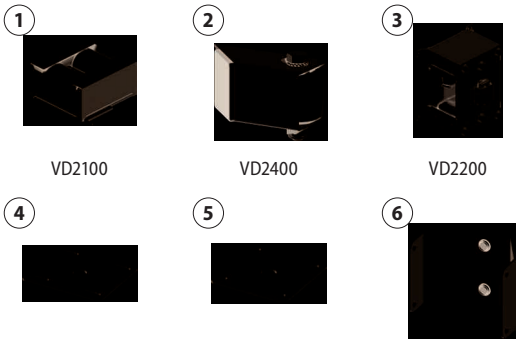

Opzionale Optional

Corretta posizione di apertura carrello di guida
Correct back guide roller opening position

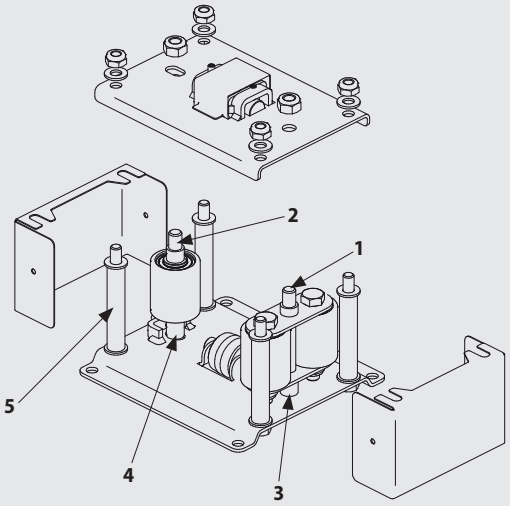

COD.	1	2	3	4	5
VD2200.100	n.1 L=8,5mm	n.1 L=12mm	n.1 L=20mm	n.1 L=23,5mm	n.4 L=87mm
VD2200.150	n.1 L=13mm	n.1 L=19,5mm	n.1 L=23mm	n.1 L=29,5mm	n.4 L=152,5mm

KD2100.100 NEW

Kit Serie 100 Guardian, max 6 m. / Series 100 Guardian kit, max 6 m.

COD.	DESCRIZIONE - DESCRIPTION	
VD2100.100	Carrello anteriore con bilancino / Surface roller assembly	1
VD2200.100	Carrello guida posteriore / Back roller	1
VD2300.100	Battente anteriore / Front strike	1
VD2400.N38	Supporto guida regolabile / Adjustable guide roller	4
VD2500.100	Maschera fissaggio rotaia / Tail guide template	2
VD2501.100	Piastra regolazione rotaia / Tail guide adjustament plate	2

KD2100.150 NEW

Kit Serie 150 Guardian, max 12 m. / Series 150 Guardian kit, max 12 m.

COD.	DESCRIZIONE - DESCRIPTION	
VD2100.150	Carrello anteriore con bilancino / Surface roller assembly	1
VD2200.150	Carrello guida posteriore / Back roller	1
VD2300.150	Battente anteriore / Front strike	1
VD2400.I52	Supporto guida regolabile / Adjustable guide roller	4
VD2500.150	Maschera fissaggio rotaia / Tail guide template	2
VD2501.150	Piastra regolazione rotaia / Tail guide adjustament plate	2

ACCESSORI VARI

Sundry Accessories

Tutte le misure sono espresse in mm dove non diversamente specificato.
All measurements are in mm unless otherwise specified.

VL0100

Catenaccio piccolo a saldare
Small drop bolt to weld

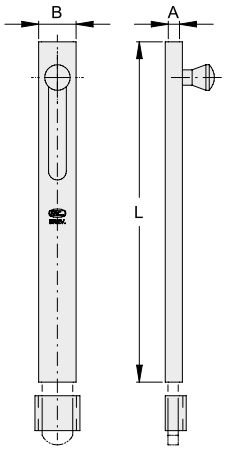

COD.	ART.	A	B	L		FINITURA
VL0100.150	194	10	22	150	20	zinc./galv.
VL0100.200	195	10	22	200	20	zinc./galv.
VL0100.250	196	10	22	250	10	zinc./galv.
VL0100.300	197	10	22	300	10	zinc./galv.
VL0100.400	198	10	22	400	10	zinc./galv.

VL0101

Catenaccio grande a saldare
Big drop bolt to weld

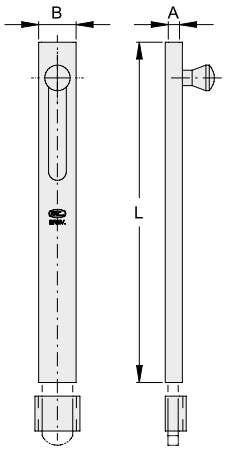

COD.	ART.	A	B	L		FINITURA
VL0101.200	295	16	30	200	12	zinc./galv.
VL0101.250	296	16	30	250	6	zinc./galv.
VL0101.300	297	16	30	300	6	zinc./galv.
VL0101.400	298	16	30	400	6	zinc./galv.
VL0101.500	299	16	30	500	6	zinc./galv.

VL0200

Catenaccio a gomito
Automatic bolt

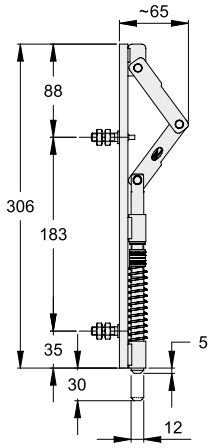

COD.	ART.		FINITURA
VL0200.310	42	12	zinc./galv.

Catenaccio per cancelli a due ante motorizzate, funzionamento automatico. Molla di richiamo in acciaio inox con ghiera di regolazione. Applicazione destra-sinistra. Fissaggio a vite sul battente.
Automatic bolt for double swing gates. Adjustable stainless steel spring. Right-left application. Leaf fixing by screws.

VL0201

Catenaccio a gomito
Automatic bolt

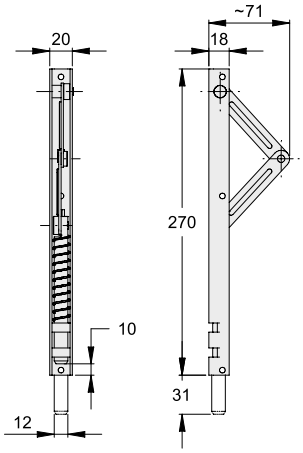

COD.	ART.		FINITURA
VL0201.270.I	1300	5	inox

VL0202

Catenaccio automatico per cancelli a 2 ante
Automatic bolt for double swing gates

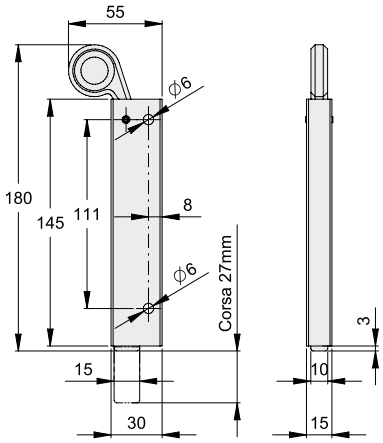

COD.	ART.		FINITURA
VL0202.180	44	6	zinc./galv.

In acciaio zincato e ottone
Galvanized steel and brass

VL0300

Catenaccio tondo con piastra a fissare
Round drop bolt with plate to fix

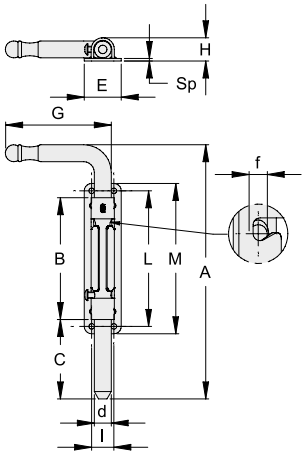

COD.	ART.	d	A	B	C	E	f	G	H	I	L	M	Sp		FINITURA
VL0300.012	50F.12	12	180	88	5-55	28	6	75	17	17	99	110	2	10	zinc./galv.
VL0300.016	50F.16	16	240	115	6-75	35	8	100	22.5	21	128	142	2.5	6	zinc./galv.

VL0301

Catenaccio tondo lungo con piastra a fissare
Long round drop bolt with plate to fix

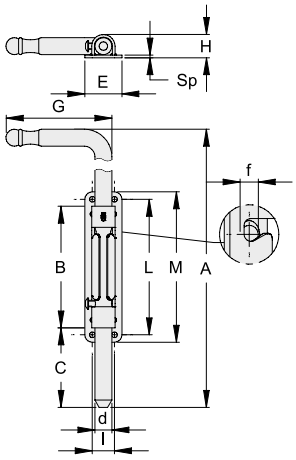

COD.	ART.	d	A	B	C	E	f	G	H	I	L	M	Sp		FINITURA
VL0301.012	50FL.12	12	330	88	5-55	28	6	75	17	17	99	110	2	10	zinc./galv.
VL0301.016	50FL.16	16	440	115	6-75	35	8	100	22.5	21	128	142	2.5	6	zinc./galv.

VL0302

Catenaccio tondo con piastra larga a fissare
Round drop bolt with large plate to fix

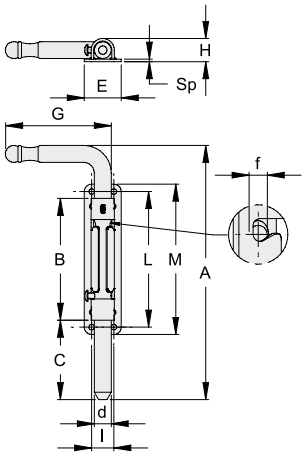

COD.	ART.	d	A	B	C	E	f	G	H	I	L	M	Sp		FINITURA
VL0302.012	50E.12	12	180	88	5-55	36	6	75	17	24	99	110	2	10	zinc./galv.
VL0302.016	50E.16	16	240	115	6-75	47	8	100	22.5	33	128	142	2.5	6	zinc./galv.

VL0303

Catenaccio lungo tondo con piastra larga a fissare
Long round drop bolt with large plate to fix

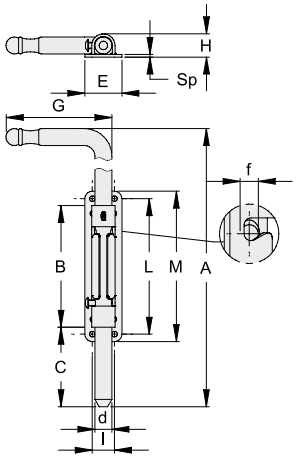

COD.	ART.	d	A	B	C	E	f	G	H	I	L	M	Sp		FINITURA
VL0303.012	50EL.12	12	330	88	5-55	36	6	75	17	24	99	110	2	10	zinc./galv.
VL0303.016	50EL.16	16	440	115	6-75	47	8	100	22.5	33	128	142	2.5	6	zinc./galv.

VL0304

Catenaccio tondo con alette guida a saldare
Round drop bolt with wings to weld

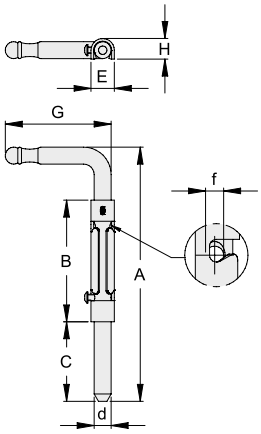

COD.	ART.	d	A	B	C	E	f	G	H		FINITURA
VL0304.012	51.12	12	180	88	5-55	16.5	6	75	15	10	zinc./galv.
VL0304.016	51.16	16	240	115	6-75	22	8	100	20	6	zinc./galv.

VL0305

Catenaccio tondo lungo con alette guida a saldare
Long round drop bolt with wings to weld

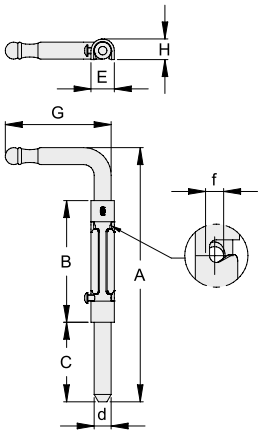

COD.	ART.	d	A	B	C	E	f	G	H		FINITURA
VL0305.012	51L.12	12	330	88	5-55	16.5	6	75	15	10	zinc./galv.
VL0305.016	51L.16	16	440	115	6-75	22	8	100	20	6	zinc./galv.

VL0306

Catenaccio tondo con scatola chiusa a saldare
Round drop bolt with closed box to weld

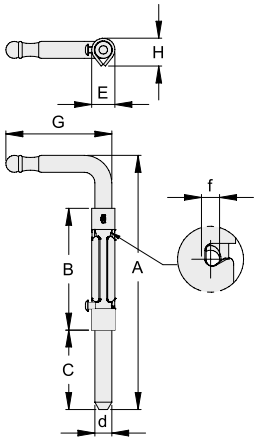

COD.	ART.	d	A	B	C	E	f	G	H		FINITURA
VL0306.016	52.16	16	240	115	6-75	22	8	100	26	6	zinc./galv.

VL0307

Catenaccio tondo lungo con scatola chiusa a saldare
Long round drop bolt with closed box to weld

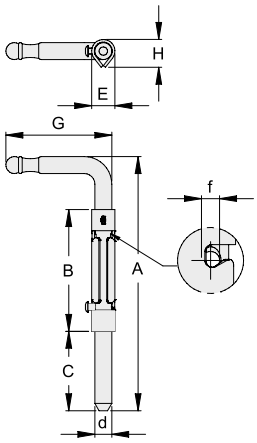

COD.	ART.	d	A	B	C	E	f	G	H		FINITURA
VL0307.016	52L.16	16	440	115	6-75	22	8	100	26	6	zinc./galv.

VL0310

Catenaccio tondo con manico sagomato con piastra a fissare
Drop bolt with shaped handle with plate to fix

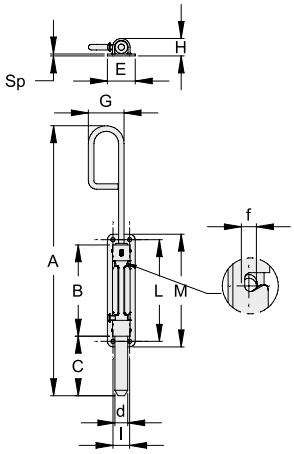

COD.	ART.	d	A	B	C	E	f	G	H	I	L	M	Sp		FINITURA
VL0310.012	50FT.12	12	246	88	5-55	28	6	40	17	17	99	110	2	10	zinc./galv.
VL0310.016	50FT.16	16	340	115	6-75	35	8	45	22.5	21	128	142	2.5	6	zinc./galv.

VL0312

Catenaccio tondo con manico sagomato e piastra larga a fissare
Drop bolt with shaped handle and large plate to fix

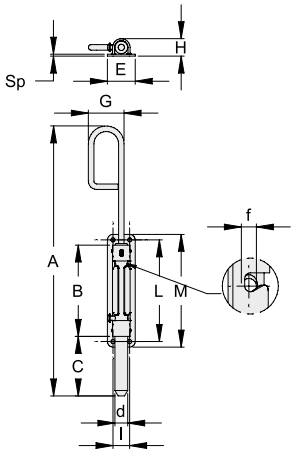

COD.	ART.	d	A	B	C	E	f	G	H	I	L	M	Sp		FINITURA
VL0312.012	50ET.12	12	246	88	5-55	36	6	40	17	24	99	110	2	10	zinc./galv.
VL0312.016	50ET.16	16	340	115	6-75	47	8	45	22.5	33	128	142	2.5	6	zinc./galv.

VL0314

Catenaccio tondo con manico sagomato a saldare
Drop bolt with shaped handle to weld

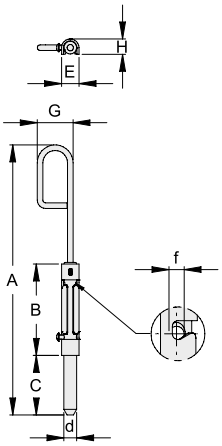

COD.	ART.	d	A	B	C	E	f	G	H		FINITURA
VL0314.012	51T.12	12	246	88	5-55	16.5	6	40	15	10	zinc./galv.
VL0314.016	51T.16	16	340	115	6-75	22	8	45	20	6	zinc./galv.

VL0316

Catenaccio tondo con manico sagomato con scatola chiusa a saldare
Round drop bolt with shaped handle closed box to weld

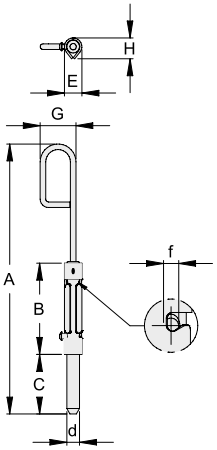

COD.	ART.		d	A	B	C	E	f	G	H		FINITURA
VL0316.016	52T.16		16	340	115	6-75	22	8	45	26	6	zinc./galv.

VL0320

Catenaccio tondo manico centrale con piastra a fissare
Central handle round drop bolt with plate to fix

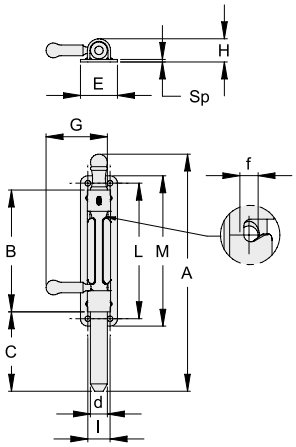

COD.	ART.	d	A	B	C	E	f	G	H	I	L	M	Sp		FINITURA
VL0320.012	50FS.12	12	170	88	5-55	28	6	54	17	17	99	110	2	10	zinc./galv.
VL0320.016	50FS.16	16	224	115	6-75	35	8	58	22.5	21	128	142	2.5	6	zinc./galv.

VL0322

Catenaccio tondo manico centrale con piastra larga a fissare
Central handle round drop bolt with large plate to fix

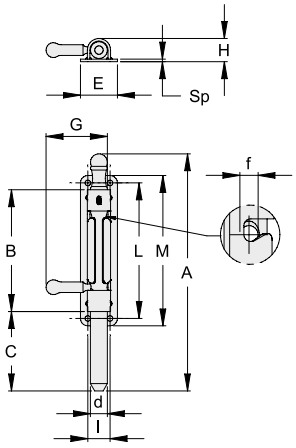

COD.	ART.	d	A	B	C	E	f	G	H	I	L	M	Sp		FINITURA
VL0322.012	50ES.12	12	170	88	5-55	36	6	54	17	24	99	110	2	10	zinc./galv.
VL0322.016	50ES.16	16	224	115	6-75	47	8	58	22.5	33	128	142	2.5	6	zinc./galv.

VL0324

Catenaccio tondo manico centrale con alette guida a saldare
Central handle round drop bolt with wings to weld

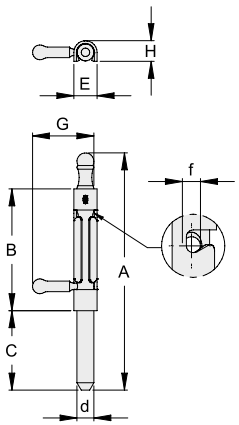

COD.	ART.	d	A	B	C	E	f	G	H		FINITURA
VL0324.012	51S.12	12	170	88	5-55	16.5	6	54	15	10	zinc./galv.
VL0324.016	51S.16	16	224	115	6-75	22	8	58	20	6	zinc./galv.

VL0326

Catenaccio tondo manico centrale con scatola chiusa a saldare
Central handle round drop bolt with closed box to weld

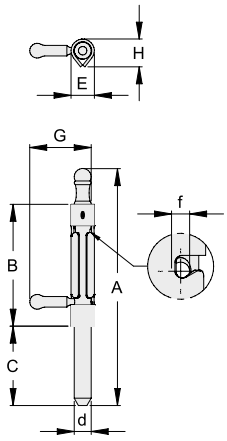

COD.	ART.	d	A	B	C	E	f	G	H		FINITURA
VL0326.016	52S.16	16	224	115	6-75	22	8	58	26	6	zinc./galv.

VL0330 NEW

Catenaccio ad incastro destro con piastra a fissare
Right slide flush drop bolt with plate to fix

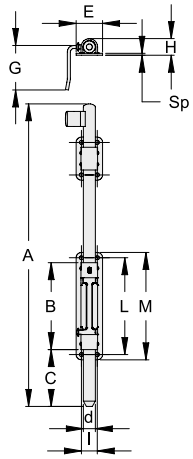

COD.	ART.	d	A	B	C	E	G	H	I	L	M	Sp		FINITURA
VL0330.016	50FAD.16	16	400	115	6-75	35	60	22	21	128	142	2.5	4	zinc./galv.

VL0331 NEW

Catenaccio ad incastro sinistro con piastra a fissare
Left slide flush drop bolt with plate to fix

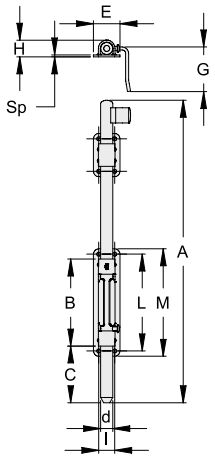

COD.	ART.	d	A	B	C	E	G	H	I	L	M	Sp		FINITURA
VL0331.016	50FAS.16	16	400	115	6-75	35	60	22	21	128	142	2.5	4	zinc./galv.

VL0334 NEW

Catenaccio ad incastro destro a saldare
Right slide flush drop bolt to weld

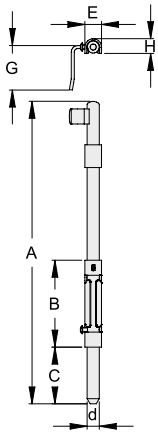

COD.	ART.	d	A	B	C	E	G	H		FINITURA
VL0334.016	51AD.16	16	400	115	6-75	22	60	20	4	zinc./galv.

VL0335 NEW

Catenaccio ad incastro sinistro a saldare
Left flush drop bolt to weld

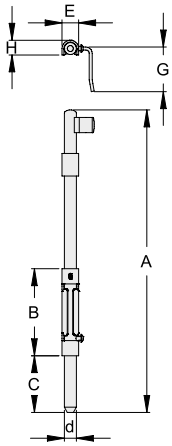

COD.	ART.	d	A	B	C	E	G	H		FINITURA
VL0335.016	51AS.16	16	400	115	6-75	22	60	20	4	zinc./galv.

VL0380

Cavallotto per catenaccio tondo con piastra forata a fissare
Round drop bolt drilled fixing plate bracket to fix

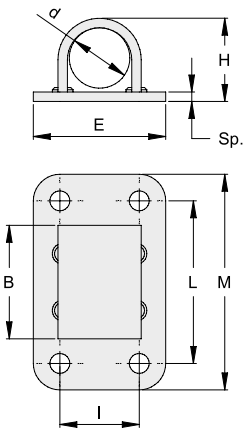

COD.	ART.	d	B	E	H	I	L	M	Sp		FINITURA
VL0380.012	53F.12	12	25	28	17	17	37	48	2	20	zinc./galv.
VL0380.016	53F.16	16	30	35	22.5	21	43	57	2.5	20	zinc./galv.

VL0382

Cavallotto per catenaccio tondo larga con piastra forata a fissare
Large round drop bolt drilled fixing plate bracket to fix

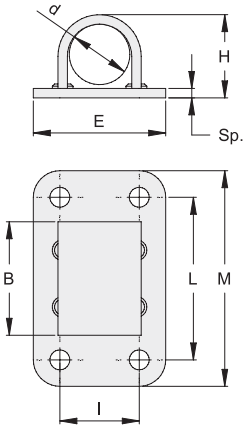

COD.	ART.	d	B	E	H	I	L	M	Sp		FINITURA
VL0382.012	53E.12	12	25	36	17	24	37	48	2	20	zinc./galv.
VL0382.016	53E.16	16	30	47	22.5	33	43	57	2.5	20	zinc./galv.

VL0384

Cavallotto per catenaccio tondo con piastra a saldare
Round drop bolt bracket to weld

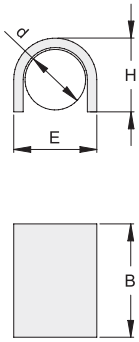

Esempio di applicazione
Example of application

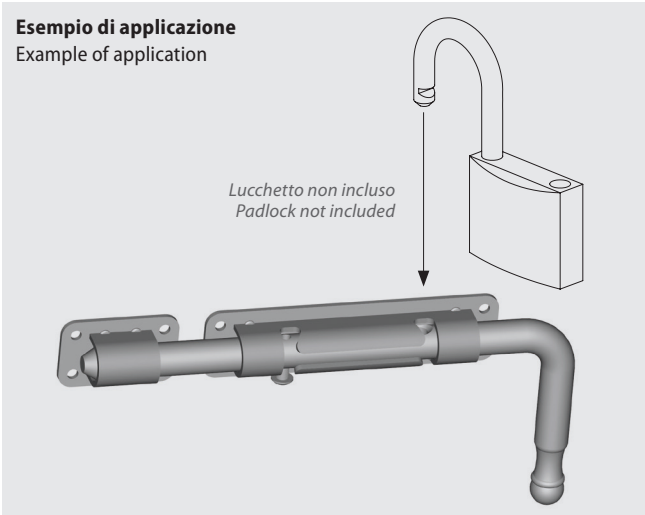

COD.	ART.	d	B	E	H		FINITURA
VL0384.012	53.12	12	25	16.5	15	20	zinc./galv.
VL0384.016	53.16	16	30	22	20	20	zinc./galv.

VL0400

Catenaccio quadro 10 mm a saldare
Square 10mm slide bolt to weld

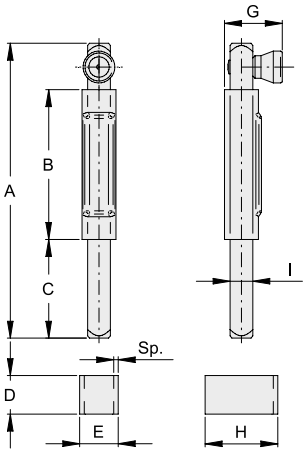

COD.	ART.	A	B	C	D	E	G	H	I	Sp		FINITURA
VL0400.130	205.130	130	66	3.5-43.5	17	17	26	32	10	2	10	zinc./galv.
VL0400.300	205.300	300	66	3.5-43.5	17	17	26	32	10	2	10	zinc./galv.

VL0401

Catenaccio quadro 14 mm a saldare
Square 14mm slide bolt to weld

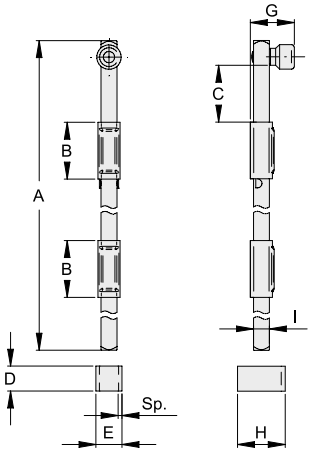

COD.	ART.	A	B	C	D	E	G	H	I	Sp		FINITURA
VL0401.300	210.300	300	50	0-50	22	23	39	42	14	3	10	zinc./galv.
VL0401.600	210.600	590	50	0-50	22	23	39	42	14	3	10	zinc./galv.

VL0410

Catenaccio portalucchetto serie leggera
Slide bolt for padlock light series

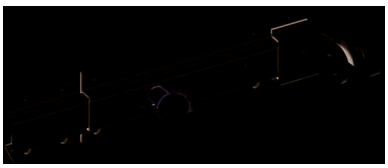

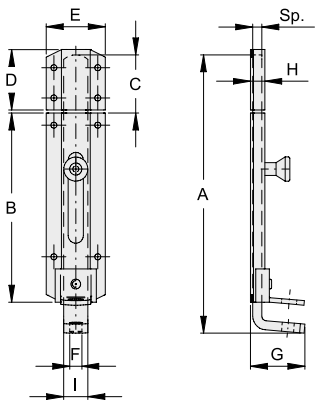

COD.	ART.	A	B	C	D	E	F	G	H	I	Sp		FINITURA
VL0410.130	284.130	130	82	0-32	40	39	8	36	10	16	6	10	zinc./galv.
VL0410.180	284.180	185	125	0-45	40	39	8	36	10	16	6	10	zinc./galv.
VL0410.250	284.250	250	195	0-45	40	39	8	36	10	16	6	10	zinc./galv.

VL0411

Catenaccio largo portalucchetto serie leggera
Large slide bolt for padlock light series

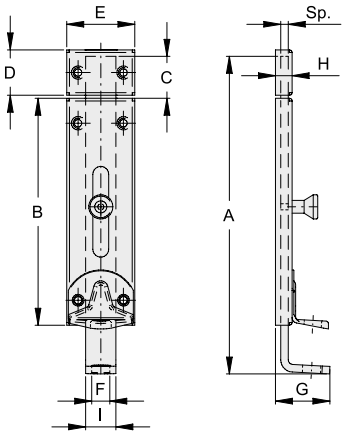

COD.	ART.	A	B	C	D	E	F	G	H	I	Sp		FINITURA
VL0411.150	285.150	153	105	0-38	30	45	12	36	11	20	5	10	zinc./galv.
VL0411.200	285.200	210	150	0-50	30	45	12	36	11	20	5	10	zinc./galv.

VL0412

Catenaccio portalucchetto serie pesante
Slide bolt for padlock heavy duty series

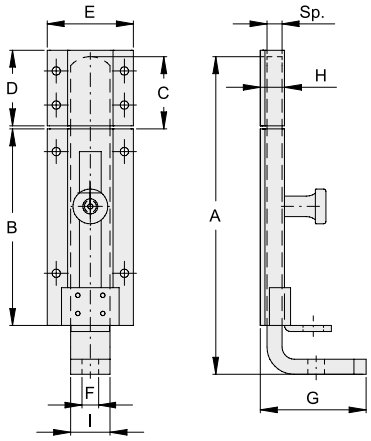

COD.	ART.	A	B	C	D	E	F	G	H	I	Sp		FINITURA
VL0412.200	286.200	210	130	0-66	50	57	11	70	16	26	10	5	zinc./galv.
VL0412.300	286.300	308	215	0-76	80	57	11	70	16	26	10	5	zinc./galv.
VL0412.400	286.400	403	290	0-98	80	57	11	70	16	26	10	5	zinc./galv.

VL0413

Catenaccio portalucchetto
Slide bolt for padlock

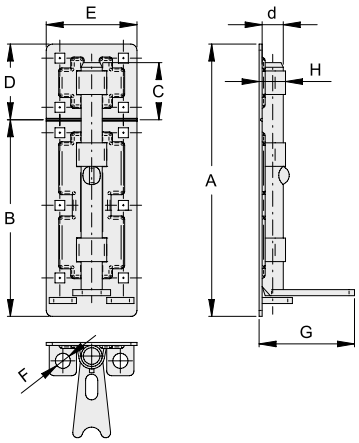

COD.	ART.	A	B	C	D	E	F	G	H	d		FINITURA
VL0413.180	287.180	180	130	0-38	50	60	10	63	18	14	6	zinc./galv.
VL0413.220	287.220	215	158	0-50	57	60	10	63	18	14	6	zinc./galv.
VL0413.270	287.270	270	185	0-77	85	60	10	63	18	14	6	zinc./galv.

VL0420

Catenaccio trasversale con fori di fissaggio
Transversal slide bolt to fix

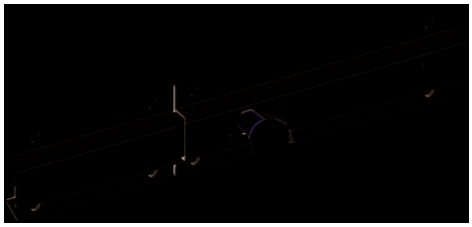

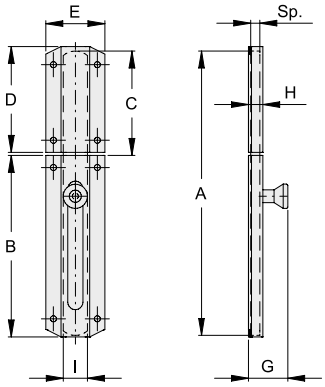

COD.	ART.	A	B	C	D	E	G	H	I	Sp		FINITURA
VL0420.050	290.50	70	50	0-22	20	39	26	10	16	6	12	zinc./galv.
VL0420.080	290.80	115	80	0-38	40	39	26	10	16	6	12	zinc./galv.
VL0420.100	290.100	150	100	0-50	40	39	26	10	16	6	12	zinc./galv.
VL0420.120	290.120	188	120	0-75	70	39	26	10	16	6	12	zinc./galv.

VL0421

Catenaccio verniciato con fori di fissaggio
Painted slide bolt to fix

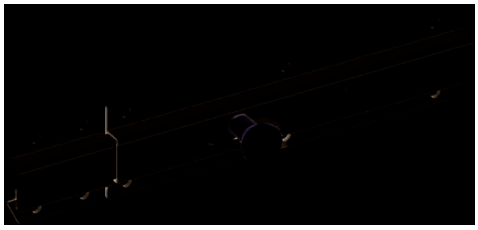

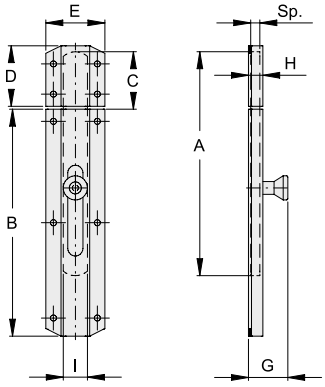

COD.	ART.	A	B	C	D	E	G	H	I	Sp		FINITURA
VL0421.150.V	295.150	148	150	0-48	40	39	26	10	16	6	10	vern./painted
VL0421.200.V	295.200	198	200	0-48	40	39	26	10	16	6	10	vern./painted
VL0421.250.V	295.250	248	250	0-48	40	39	26	10	16	6	10	vern./painted
VL0421.300.V	295.300	298	300	0-48	40	39	26	10	16	6	10	vern./painted
VL0421.400.V	295.400	398	400	0-48	40	39	26	10	16	6	10	vern./painted
VL0421.500.V	295.500	498	500	0-45	40	39	26	10	16	6	10	vern./painted
VL0421.700.V	295.700	698	700	0-45	40	39	26	10	16	6	6	vern./painted

VL0430

Catenaccio a leva per cancelli serie leggera
Levered bolt for gates light series

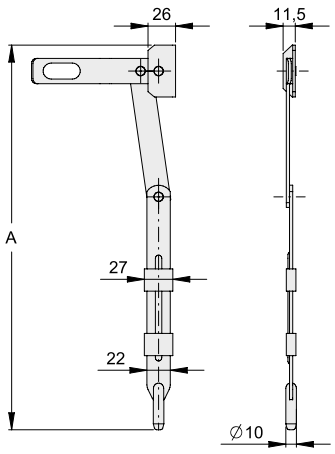

COD.	ART.	A		FINITURA
VL0430.350	305.350	347.5-381.5	10	zinc./galv.
VL0430.450	305.450	447.5-481.5	10	zinc./galv.
VL0430.600	305.600	597.5-631.5	10	zinc./galv.
VL0430.700	305.700	697.5-731.5	10	zinc./galv.

VL0431

Catenaccio a leva per cancelli serie pesante
Levered bolt for gates heavy duty series

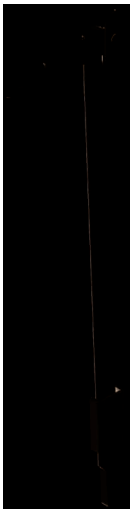

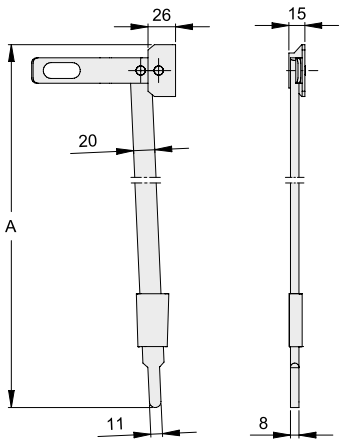

COD.	ART.	A		FINITURA
VL0431.500	310.500	455.5-489.5	10	zinc./galv.
VL0431.700	310.700	655.5-689.5	10	zinc./galv.

VL0500

Chiavistello a saldare
Small slide bolt to weld

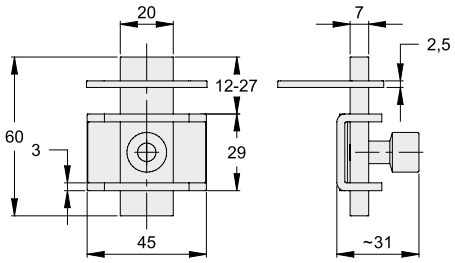

COD.	ART.		FINITURA
VL0500.001	225	50	zinc./galv.

VL0510

Tavellino per sportelli
Small cabinete latch

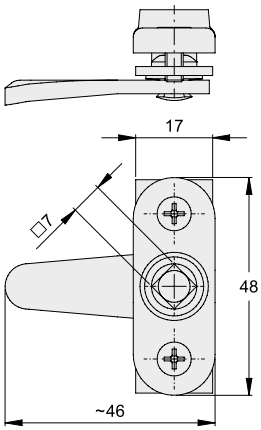

COD.	ART.		FINITURA
VL0510.001	230	50	zinc./galv.
VL0510.001.I	1230	50	inox

VL0511

Chiave per tavellino quadra femmina
Female square latch key

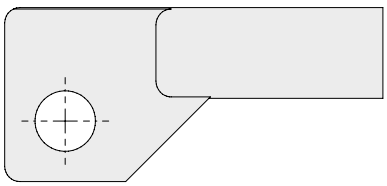

COD.	ART.		FINITURA
VL0511.001	231	50	zinc./galv.

VL0520

Tavellino per sportelli
Small cabinete latch

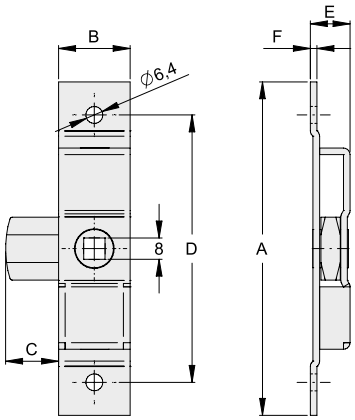

COD.	ART.	A	B	C	D	E	F		FINITURA
VL0520.001	232P	101	18	15	81	12	2	20	zinc./galv.
VL0520.002	232	126	27	20	101	15	2.6	20	zinc./galv.

VL0521

Chiave per tavellino quadra maschio
Male square latch key

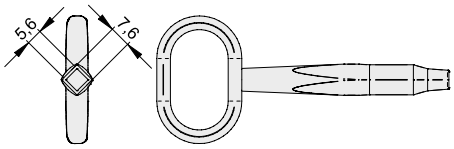

COD.	ART.		FINITURA
VL0521.001	233	20	zinc./galv.

VL0530

Maniglia a blocco versione destra/sinistra
Locking handle right/left

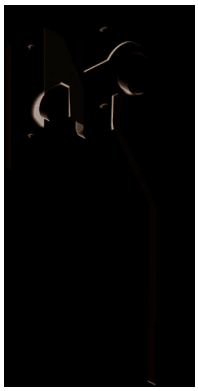

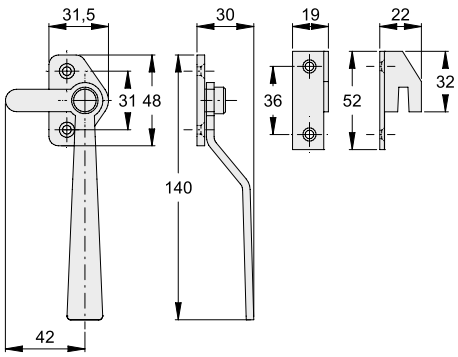

COD.	ART.		FINITURA
VL0530.01D	280D	12	zinc./galv.
VL0530.01S	280S	12	zinc./galv.

Immagine versione destra
Right-hand version image

VL0540

Cricchetto per sopraluci
Catch for upper windows

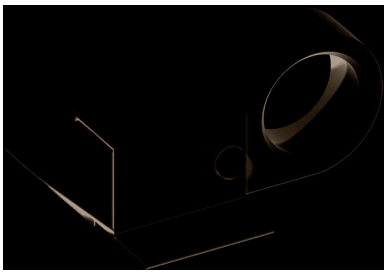

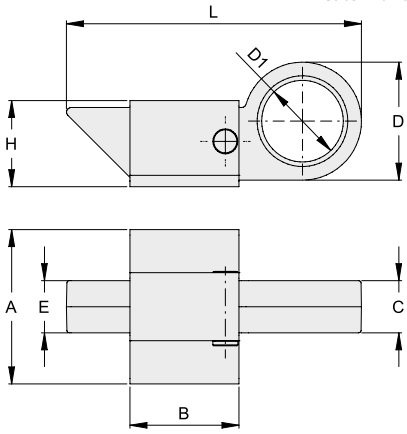

COD.	ART.	A	B	C	E	H	L	D	D1		FINITURA
VL0540.003	267	36	28	5	9	22	68	25	18	25	zinc./galv.
VL0540.003.I	1267	40	31	10	10	23	67	23	14	25	inox
VL0540.001.L	265	36	28	4	9	22	65	24	17	20	lucido/black
VL0540.002.L	266	40	34	5	14	25	75	28	19	25	lucido/black

VL0543

Piastrina per cricchetti
Strike for catch

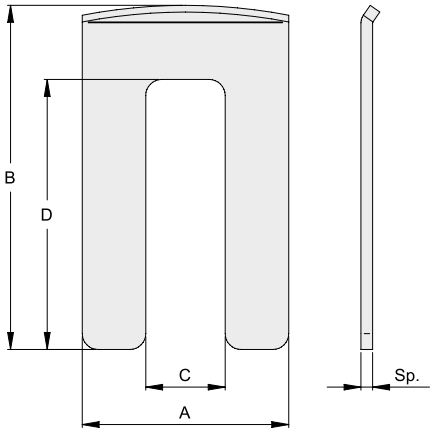

COD.	ART.	A	B	C	D	Sp		FINITURA
VL0543.001.L	270	39	65	15	51	2.2	40	lucido/black
VL0543.002.L	271	44	66	21	51	2.2	100	lucido/black

VL0550

Catenaccio a leva per serramenti metallici
Levered flush bolt for metal doors and windows

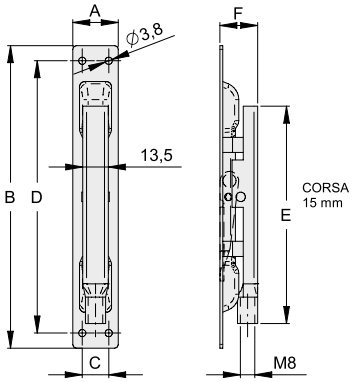

COD.	ART.	A	B	C	D	E	F		FINITURA
VL0550.016	320/16	16	147	-	131	90	24	10	zinc./galv.
VL0550.020	320/20	20	152	12	140	115	20	10	zinc./galv.
VL0550.024	320/24	24	160	14	144	115	20	10	zinc./galv.

VL0551

Catenaccio a leva azione semplice con leva ottone per serramenti metallici
Brass levered flush bolt for metal doors and windows

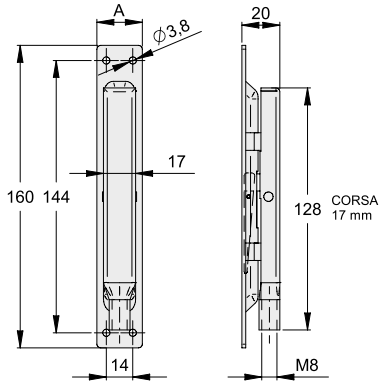

COD.	ART.	A		FINITURA
VL0551.020	321/20	20	10	zinc./galv.
VL0551.024	321/24	24	10	zinc./galv.

VL0552

Catenaccio a leva doppia azione per serramenti metallici
Double acting flush bolt for metal doors and windows

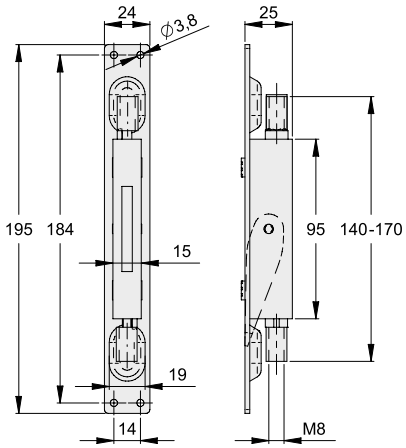

COD.	ART.		FINITURA
VL0552.024	322	10	zinc./galv.

VL0560

Cariglione a doppia azione
Double acting lever bolt

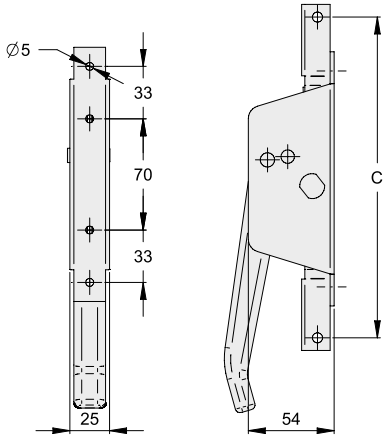

COD.	ART.	C			FINITURA
VL0560.001	390	155-205	-	5	zinc./galv.
VL0560.002	391	155-205	con cilindro e chiavi/with cylinder and keys	5	zinc./galv.

VL1100

Distanziale regolabile tipo 1
Adjustable spacer type 1

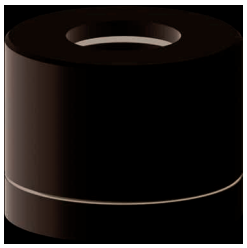

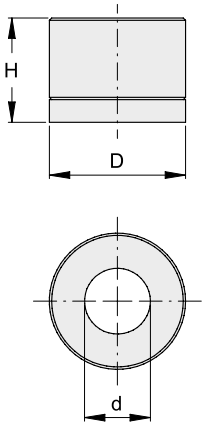

COD.	ART.	D	H	d		FINITURA
VL1100.25A	D01.25.1	25	15-25	14.5	50	zinc./galv.
VL1100.25B	D01.25.2	25	23-33	14.5	50	zinc./galv.
VL1100.30A	D01.30.1	30	15-25	14.5	50	zinc./galv.
VL1100.30B	D01.30.2	30	23-33	14.5	50	zinc./galv.
VL1100.35A	D01.35.1	35	15-25	14.5	50	zinc./galv.
VL1100.35B	D01.35.2	35	23-33	14.5	50	zinc./galv.
VL1100.25A.L	D01.25.1N	25	15-25	14.5	50	lucido/black
VL1100.25B.L	D01.25.2N	25	23-33	14.5	50	lucido/black
VL1100.30A.L	D01.30.1N	30	15-25	14.5	50	lucido/black
VL1100.30B.L	D01.30.2N	30	23-33	14.5	50	lucido/black
VL1100.35A.L	D01.35.1N	35	15-25	14.5	50	lucido/black
VL1100.35B.L	D01.35.2N	35	23-33	14.5	50	lucido/black

VL1110

Distanziale regolabile tipo 2
Adjustable spacer type 2

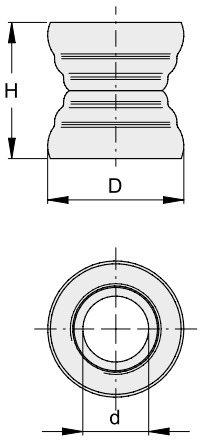

COD.	ART.	D	H	d		FINITURA
VL1110.25A	D02.25.1	25	23-33	11	50	zinc./galv.
VL1110.25B	D02.25.2	25	30-40	11	50	zinc./galv.
VL1110.30A	D02.30.1	30	23-33	14.5	50	zinc./galv.
VL1110.30B	D02.30.2	30	30-40	14.5	50	zinc./galv.
VL1110.35A	D02.35.1	35	23-33	14.5	50	zinc./galv.
VL1110.35B	D02.35.2	35	30-40	14.5	50	zinc./galv.
VL1110.25A.L	D02.25.1N	25	23-33	11	50	lucido/black
VL1110.25B.L	D02.25.2N	25	30-40	11	50	lucido/black
VL1110.30A.L	D02.30.1N	30	23-33	14.5	50	lucido/black
VL1110.30B.L	D02.30.2N	30	30-40	14.5	50	lucido/black
VL1110.35A.L	D02.35.1N	35	23-33	14.5	50	lucido/black
VL1110.35B.L	D02.35.2N	35	30-40	14.5	50	lucido/black

VL1120

Distanziale regolabile tipo 3
Adjustable spacer type 3

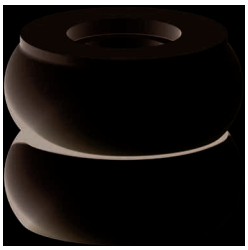

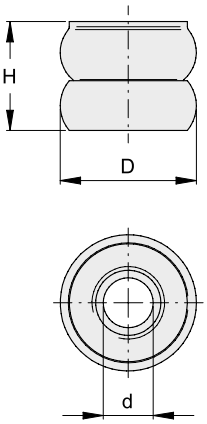

COD.	ART.	D	H	d		FINITURA
VL1120.30A	D03.30.1	30	23-33	10.5	50	zinc./galv.
VL1120.35A	D03.35.1	35	23-33	14.5	50	zinc./galv.
VL1120.30A.L	D03.30.1N	30	23-33	10.5	50	lucido/black
VL1120.35A.L	D03.35.1N	35	23-33	14.5	50	lucido/black

VL1130

Distanziale regolabile tipo 4
Adjustable spacer type 4

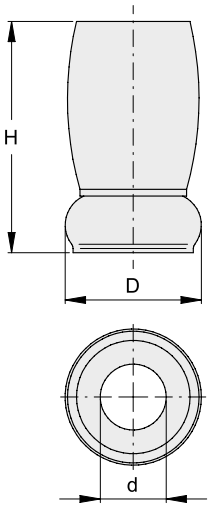

COD.	ART.	D	H	d		FINITURA
VL1130.25A	D04.25.1	25	50-80	11	50	zinc./galv.
VL1130.30A	D04.30.1	30	50-80	14.5	50	zinc./galv.
VL1130.35A	D04.35.1	35	50-80	14.5	50	zinc./galv.
VL1130.25A.L	D04.25.1N	25	50-80	11	50	lucido/black
VL1130.30A.L	D04.30.1N	30	50-80	14.5	50	lucido/black
VL1130.35A.L	D04.35.1N	35	50-80	14.5	50	lucido/black

VL1140

Distanziale regolabile tipo 5
Adjustable spacer type 5

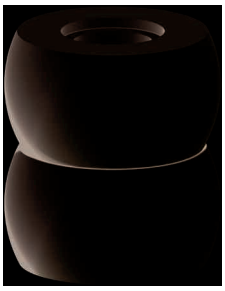

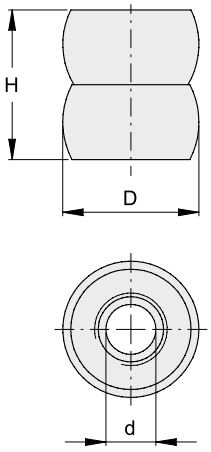

COD.	ART.	D	H	d		FINITURA
VL1140.30A	D05.30.1	30	32-47	10.5	50	zinc./galv.
VL1140.35A	D05.35.1	35	32-47	14.5	50	zinc./galv.
VL1140.30A.L	D05.30.1N	30	32-47	10.5	50	lucido/black
VL1140.35A.L	D05.35.1N	35	32-47	14.5	50	lucido/black

VL2100

Cappello quadro a saldare
Square cap to weld

COD.	ART.	L	H		FINITURA
VL2100.040	438/Z	40	6	120	zinc./galv.
VL2100.050	439/Z	50	8	120	zinc./galv.
VL2100.060	138/Z	60	9	120	zinc./galv.
VL2100.080	139/Z	80	11	50	zinc./galv.
VL2100.100	140/Z	100	15	20	zinc./galv.
VL2100.120	141/Z	120	17	20	zinc./galv.
VL2100.150	142/Z	150	21	40	zinc./galv.
VL2100.040.L	438	40	6	120	lucido/black
VL2100.050.L	439	50	8	120	lucido/black
VL2100.060.L	138	60	9	120	lucido/black
VL2100.080.L	139	80	11	50	lucido/black
VL2100.100.L	140	100	15	20	lucido/black
VL2100.120.L	141	120	17	20	lucido/black
VL2100.150.L	142	150	21	40	lucido/black

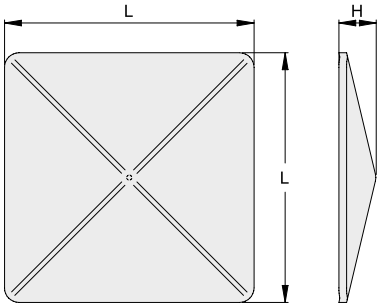

VL2101

Cappello quadro con bordo
Square flanged cap

COD.	ART.	L	B	H		FINITURA
VL2101.020	184/Z	20	7.5	12	160	zinc./galv.
VL2101.030	185/Z	30	7.5	13	100	zinc./galv.
VL2101.040	186/Z	40	7.5	14	60	zinc./galv.
VL2101.050	187/Z	50	7.5	16	50	zinc./galv.
VL2101.060	188/Z	60	7.5	17	50	zinc./galv.
VL2101.080	189/Z	80	7.5	20	30	zinc./galv.
VL2101.100	190/Z	100	7.5	23	20	zinc./galv.
VL2101.120	191/Z	120	8.5	26	20	zinc./galv.
VL2101.150	192/Z	150	8.5	31	30	zinc./galv.
VL2101.175	193/Z	175	9	35	25	zinc./galv.
VL2101.200	193.200/Z	200	10.5	39	20	zinc./galv.
VL2101.030.I	1185	30	7.5	13	100	inox
VL2101.040.I	1186	40	7.5	14	60	inox
VL2101.050.I	1187	50	7.5	16	50	inox
VL2101.060.I	1188	60	7.5	17	50	inox
VL2101.080.I	1189	80	7.5	20	30	inox
VL2101.100.I	1190	100	7.5	23	20	inox
VL2101.120.I	1191	120	8.5	26	20	inox
VL2101.150.I	1192	150	8.5	31	10	inox
VL2101.200.I	1193.200	200	12	39	20	inox
VL2101.050.A	187A	50	7.5	16	50	allum.
VL2101.060.A	188A	60	7.5	17	50	allum.
VL2101.080.A	189A	80	7.5	20	30	allum.
VL2101.100.A	190A	100	7.5	23	20	allum.
VL2101.120.A	191A	120	8.5	26	20	allum.
VL2101.150.A	192A	150	8.5	31	30	allum.
VL2101.200.A	193.200A	200	10.5	39	20	allum.
VL2101.020.L	184	20	7.5	12	160	lucido/black
VL2101.030.L	185	30	7.5	13	100	lucido/black
VL2101.040.L	186	40	7.5	14	60	lucido/black
VL2101.050.L	187	50	7.5	16	50	lucido/black
VL2101.060.L	188	60	7.5	17	50	lucido/black
VL2101.080.L	189	80	7.5	20	30	lucido/black
VL2101.100.L	190	100	7.5	23	20	lucido/black
VL2101.120.L	191	120	8.5	26	20	lucido/black
VL2101.150.L	192	150	8.5	31	30	lucido/black
VL2101.175.L	193	175	9	35	25	lucido/black
VL2101.200.L	193.200	200	10.5	39	20	lucido/black

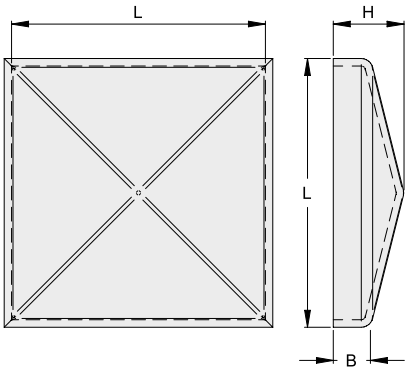

VL2102

Cappello rettangolare con bordo
Rettangular flanged cap

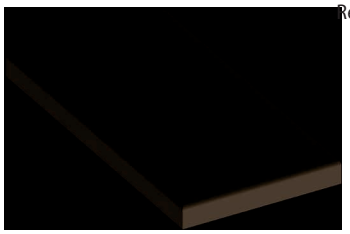

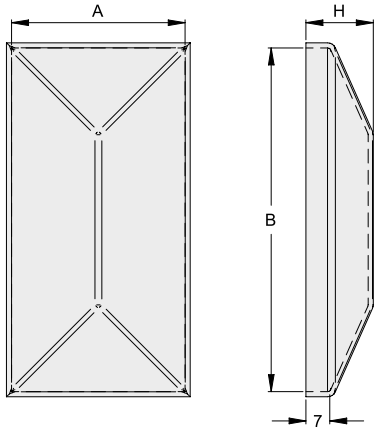

COD.	ART.	A	B	H		FINITURA
VL2102.030	481/Z	20	30	12	100	zinc./galv.
VL2102.040	482/Z	20	40	12	80	zinc./galv.
VL2102.050	483/Z	30	50	14	130	zinc./galv.
VL2102.060	484/Z	30	60	14	120	zinc./galv.
VL2102.060.1	485/Z	40	60	16	90	zinc./galv.
VL2102.080	486/Z	40	80	16	100	zinc./galv.
VL2102.100	487/Z	50	100	20	60	zinc./galv.
VL2102.030.L	481	20	30	12	100	lucido/black
VL2102.040.L	482	20	40	12	80	lucido/black
VL2102.050.L	483	30	50	14	130	lucido/black
VL2102.060.L	484	30	60	14	120	lucido/black
VL2102.060.L1	485	40	60	16	90	lucido/black
VL2102.080.L	486	40	80	16	100	lucido/black
VL2102.100.L	487	50	100	20	60	lucido/black

VL2103

Cappello tondo con bordo
Flanged round cap

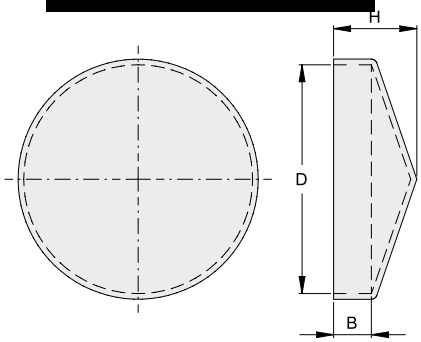

COD.	ART.	D	B	H		FINITURA
VL2103.030	461/Z	30	10	16	250	zinc./galv.
VL2103.033	462/Z	33	10	17	250	zinc./galv.
VL2103.042	463/Z	42	10	19	160	zinc./galv.
VL2103.048	464/Z	48	10	20	110	zinc./galv.
VL2103.060	465/Z	60	10	22	70	zinc./galv.
VL2103.076	466/Z	76	12	27	50	zinc./galv.
VL2103.090	467/Z	90	12	25	40	zinc./galv.
VL2103.101	468/Z	101	12	26	36	zinc./galv.
VL2103.114	469/Z	114	12	29	32	zinc./galv.
VL2103.030.L	461	30	10	16	250	lucido/black
VL2103.033.L	462	33	10	17	250	lucido/black
VL2103.042.L	463	42	10	19	160	lucido/black
VL2103.048.L	464	48	10	20	110	lucido/black
VL2103.060.L	465	60	10	22	70	lucido/black
VL2103.076.L	466	76	12	27	50	lucido/black
VL2103.090.L	467	90	12	25	40	lucido/black
VL2103.101.L	468	101	12	26	36	lucido/black
VL2103.114.L	469	114	12	29	32	lucido/black

VL2104

Cappello piano con bordo
Flat flanged cap

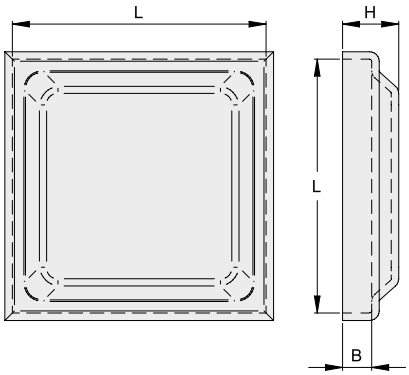

COD.	ART.	L	B	H		FINITURA
VL2104.040	200.40/Z	40	8	12.5	60	zinc./galv.
VL2104.050	200.50/Z	50	6	12.5	50	zinc./galv.
VL2104.060	200.60/Z	60	6	13.5	50	zinc./galv.
VL2104.080	200.80/Z	80	7	14	30	zinc./galv.
VL2104.100	200.100/Z	100	7	15	20	zinc./galv.
VL2104.120	200.120/Z	120	8	16	20	zinc./galv.
VL2104.150	200.150/Z	150	9	17	30	zinc./galv.
VL2104.040.L	200.40	40	8	12.5	60	lucido/black
VL2104.050.L	200.50	50	6	12.5	50	lucido/black
VL2104.060.L	200.60	60	6	13.5	50	lucido/black
VL2104.080.L	200.80	80	7	14	30	lucido/black
VL2104.100.L	200.100	100	7	15	20	lucido/black
VL2104.120.L	200.120	120	8	16	20	lucido/black
VL2104.150.L	200.150	150	9	17	30	lucido/black

VL3100

Serratura ad infilare con catenaccio a gancio sporgente
Slip-on hook lock

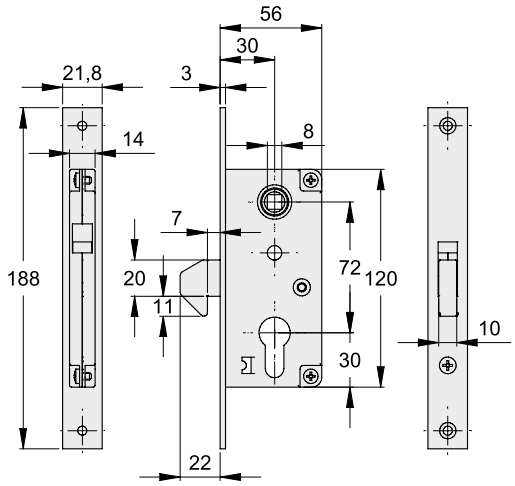

COD.	ART.		FINITURA
VL3100.001	910.30	1	zinc./galv.

VL3101

Serratura a gancio con cilidro e chiavi
Hook lock with cylinder and keys

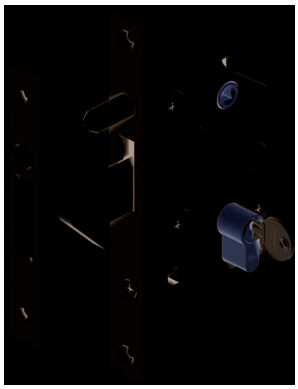

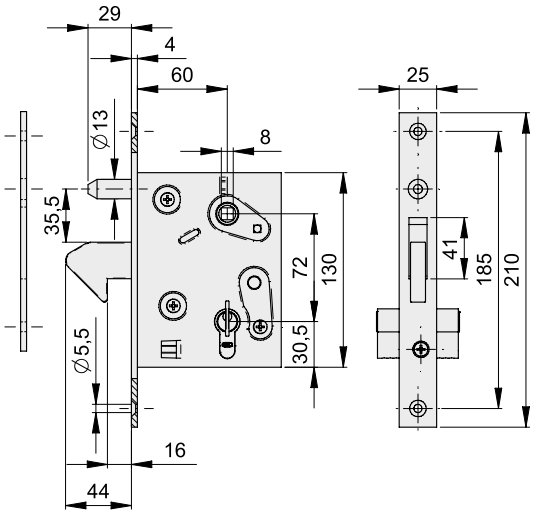

COD.	ART.		FINITURA
VL3101.001	350	1	zinc./galv.

VL3111

Scatola copriserratura
Lock box

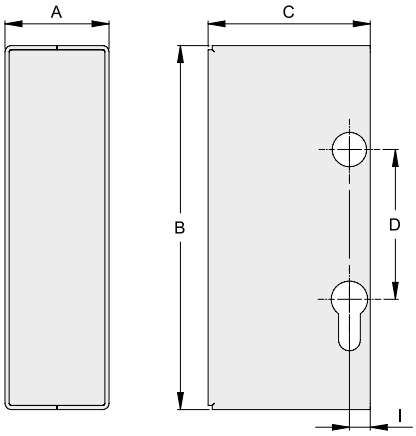

COD.	ART.	A	B	C	D	I		FINITURA
VL3111.040	351/40	40	175	78	72	20	20	zinc./galv.
VL3111.040.1	352/40	40	175	80	72	10	20	zinc./galv.
VL3111.050	351/50	50	175	80	72	10	20	zinc./galv.

VL3112

Scatola copriserratura ad incastro
Slip-on lock box

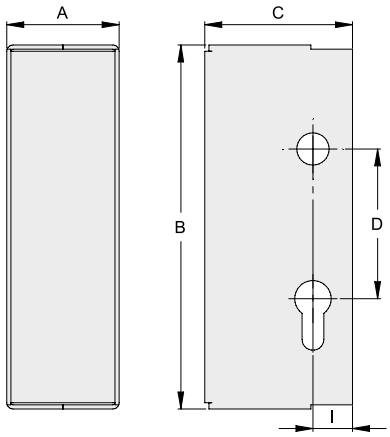

COD.	ART.	A	B	C	D	I		FINITURA
VL3112.050.1	352/50	54	175	71	72	19	20	zinc./galv.

Da usare esclusivamente con serrature da 50 mm
Use only with 50 mm locks

VL3200

Serratura di sicurezza per interni
Indoor safety lock

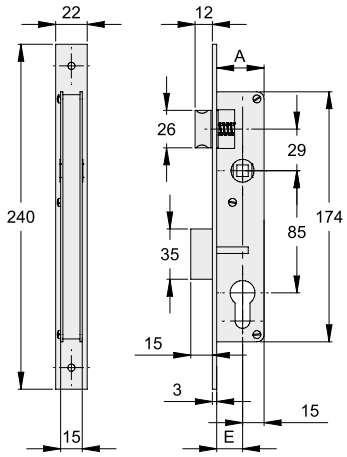

COD.	ART.	E	A		FINITURA
VL3200.020	340.20	18	33	10	zinc./galv.
VL3200.025	340.25	22	37	10	zinc./galv.
VL3200.030	340.30	27	42	10	zinc./galv.

VL3210

Contropiastra per serratura a scrocco
Striking plate for spring lock

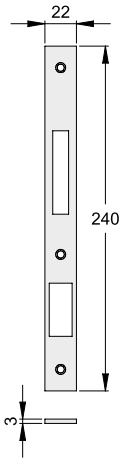

COD.	ART.		FINITURA
VL3210.001	341	10	zinc./galv.

VL3300

Cilindro con chiave
Cylinder with key

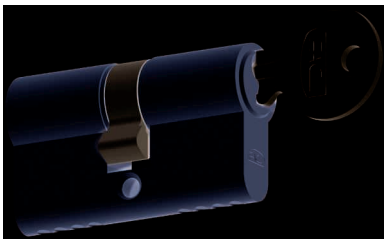

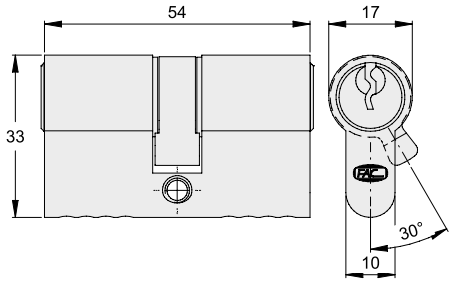

COD.	ART.		FINITURA
VL3300.001	C35054	10	ott./brass.

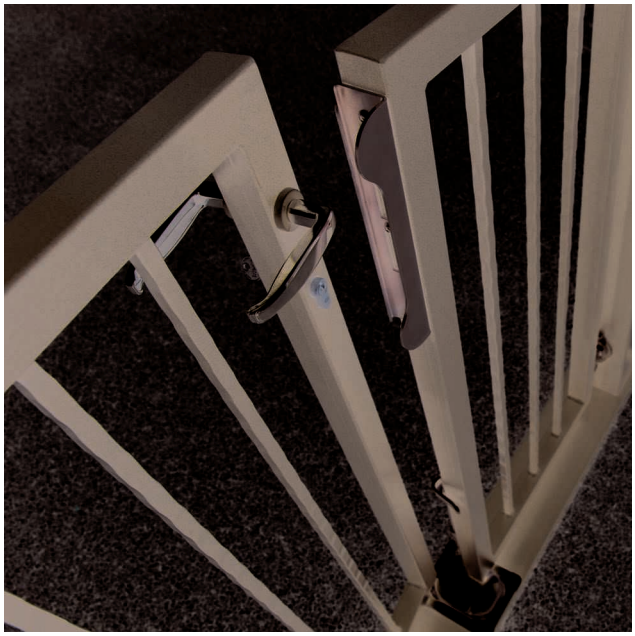

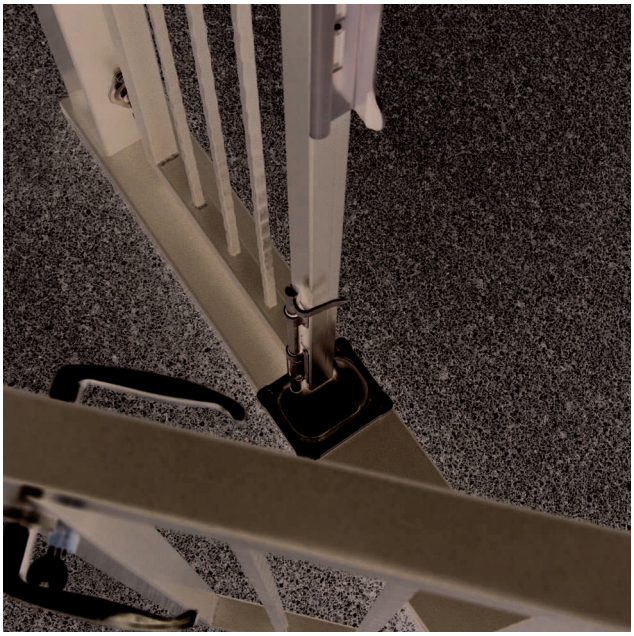

VL4100

Cerniera per serramenti in ferro con 2 ali, perno sfilabile e rondella
Hinge for steel doors and windows with 2 flags, removable pin and washer

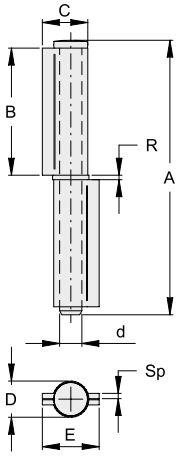

COD.	ART.	A	B	C	D	E	d	Sp	R		FINITURA
VL4100.060.I	1100.60	58	26	13.5	10	17	5.7	2	2	24	inox
VL4100.080.I	1100.80	83	38	16.5	12	21	7.7	2.5	2	24	inox
VL4100.100.I	1100.100	103	48	17.5	13	22	8.7	2.5	2	24	inox
VL4100.120.I	1100.120	122	57	21	15.3	26.7	9.8	2.5	2.5	24	inox
VL4100.140.I	1100.140	144	68	21.5	16	27	10.7	2.5	2.5	24	inox
VL4100.060.L	100.60	60	27	14	10	18	5.8	2	2	24	lucido/black
VL4100.080.L	100.80	80	36	17	12	22	7.8	2	2	24	lucido/black
VL4100.100.L	100.100	100	46	18	14	22	8.8	2.2	2	24	lucido/black
VL4100.120.L	100.120	120	56	20	15	25	9.8	2.3	2	24	lucido/black
VL4100.140.L	100.140	140	66	22	16	28	10.8	2.5	2.2	24	lucido/black
VL4100.140.L1	100.140R	146	66	23	17.5	28.5	11.8	2.75	2.5	12	lucido/black
VL4100.170.L	100.170	170	81	23	17	29	11.8	2.7	2.5	12	lucido/black
VL4100.200.L	100.200	200	96	27	20	34	13.8	3	2.5	12	lucido/black

VL4101

Cerniera per serramenti in ferro con 3 ali, perno sfilabile e rondella
Hinge for steel doors and windows with 3 flags, removable pin and washer

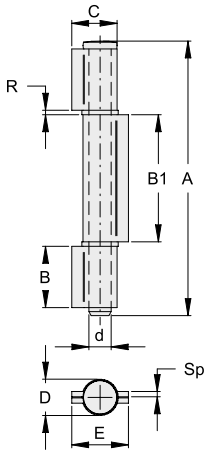

COD.	ART.	A	B	C	B1	D	E	d	Sp	R		FINITURA
VL4101.080.L	105.80	80	17	17	36	12	22	7.8	2	2	24	lucido/black
VL4101.100.L	105.100	100	22	18	46	14	22	8.8	2.2	2	24	lucido/black
VL4101.120.L	105.120	120	27	20	56	15	25	9.8	2.3	2	24	lucido/black
VL4101.140.L	105.140	140	32	22	66	16	28	10.8	2.5	2.2	24	lucido/black
VL4101.140.L1	105.140R	146	32	23	66	17.5	28.5	11.8	2.75	2.5	12	lucido/black
VL4101.170.L	105.170	170	39	23	81	17	29	11.8	2.7	2.5	12	lucido/black
VL4101.200.L	105.200	200	47	27	96	20	34	13.8	3	2.5	12	lucido/black

VL4110

Cerniera per serramenti in ferro con 2 ali, perno sfilabile e rondella
Hinge for steel doors and windows with 2 flags, removable pin and washer

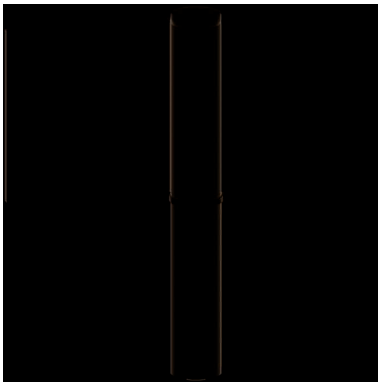

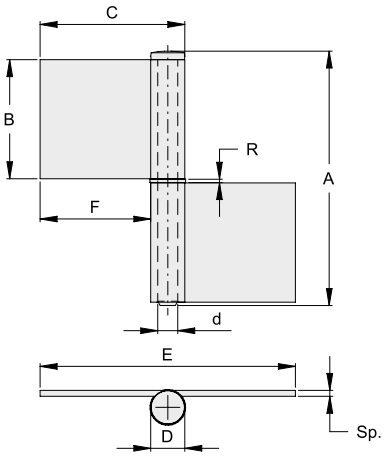

COD.	ART.	A	B	C	D	d	Sp	E	F	R		FINITURA
VL4110.140.L	249.140	150	70	85	20	11.8	3.5	150	65	2.3	10	lucido/black

VL4112

Cerniera per serramenti in ferro con 3 ali e perno sfilabile
Hinge for steel doors and windows with 3 flags and removable pin

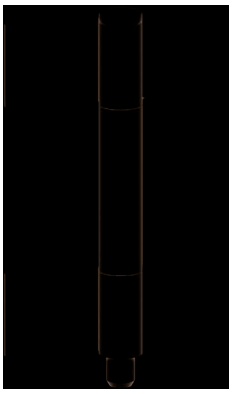

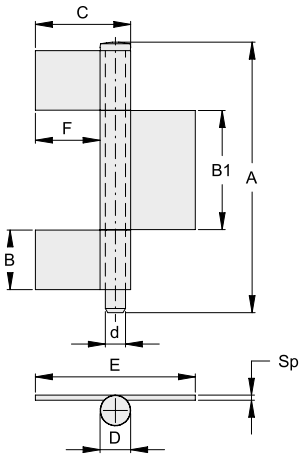

COD.	ART.	A	B	B1	C	D	d	Sp	E	F		FINITURA
VL4112.110.L	250.110	130	30	50	60	15	9.8	2.6	105	45	10	lucido/black
VL4112.140.L	250.140	160	35	70	56	18	11.8	3	95	39	10	lucido/black
VL4112.170.L	250.170	190	45	80	65	20	11.8	3.5	110	46	10	lucido/black
VL4112.200.L	250.200	220	50	100	69	22	12.8	4	115	46	10	lucido/black

VL4120

Cerniera per cancelli con 2 ali aperte, perno sfilabile e rondella in ottone
Hinge for steel gate with 2 open flags, removable pin and brass washer

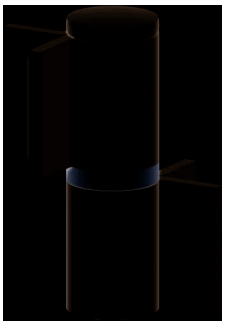

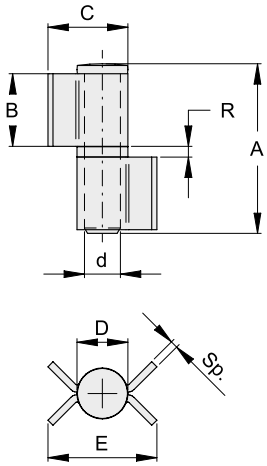

COD.	ART.	A	B	C	E	D	d	Sp	R		FINITURA
VL4120.090.L	115.90	90	40	44	64	28	19.8	4	4	8	lucido/black
VL4120.180.L	115.180	180	85	44	64	28	19.8	4	4	4	lucido/black

VL4121

Cerniera per cancelli con 2 ali aperte, perno sfilabile e cuscinetto
Hinge for steel gate with 2 open flags, removable pin and bearing

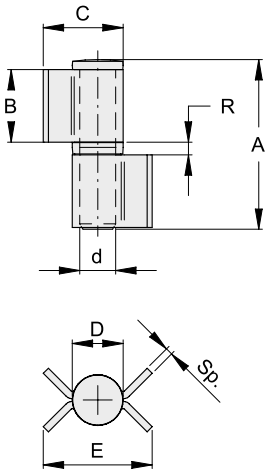

COD.	ART.	A	B	C	E	D	d	Sp	R		FINITURA
VL4121.090.L	120.90	90	40	44	64	28	19.8	4	7	8	lucido/black
VL4121.180.L	120.180	180	85	44	64	28	19.8	4	7	4	lucido/black

VL4122

Cerniera per cancelli con 3 ali aperte, perno sfilabile e 2 rondelle in ottone
Hinge for steel gate with 3 open flags, removable pin and 2 brass washers

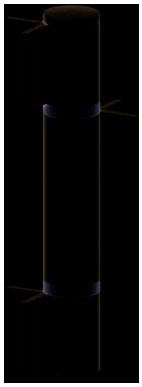

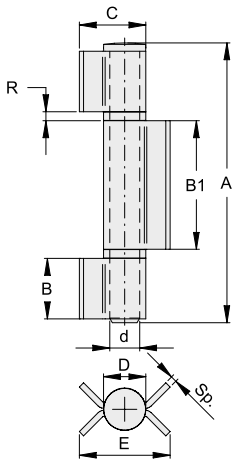

COD.	ART.	A	B	C	E	B1	D	d	Sp	R		FINITURA
VL4122.180.L	125.180	180	40	44	64	85	28	19.8	4	4	4	lucido/black

VL4123

Cerniera per cancelli 3 ali aperte, perno sfilabile e 2 cuscinetti
Hinge for steel gate with 3 open flags, removable pin and 2 bearings

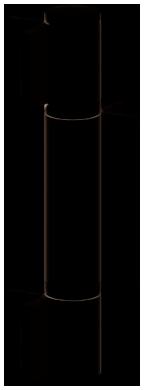

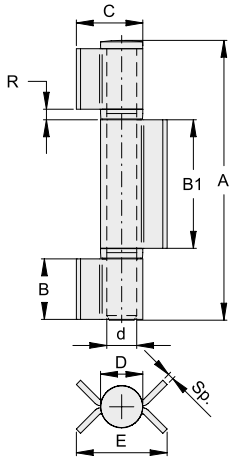

COD.	ART.	A	B	C	E	B1	D	d	Sp	R		FINITURA
VL4123.180.L	130.180	180	40	44	64	85	28	19.8	4	7	4	lucido/black

VL4124

Cerniera per cancelli con 4 ali aperte, perno sfilabile e 3 rondelle in ottone
Hinge for steel gate with 4 pen flags, removable pin and 3 brass washers

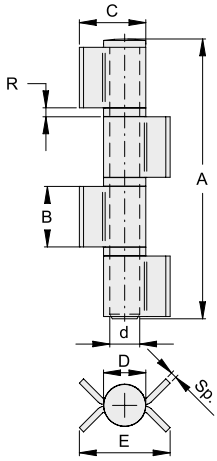

COD.	ART.	A	B	C	E	D	d	Sp	R		FINITURA
VL4124.180.L	135.180	180	40	44	64	28	19.8	4	4	4	lucido/black

VL4125

Cerniera per cancelli con 4 ali aperte, perno sfilabile e 3 cuscinetti
Hinge for steel gate with 4 open flags, removable pin and 3 bearings

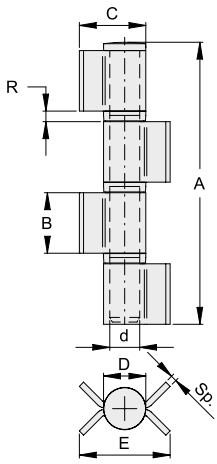

COD.	ART.	A	B	C	E	D	d	Sp	R		FINITURA
VL4125.180.L	140.180	180	40	44	64	28	19.8	4	7	4	lucido/black

VL4130

Cerniera per cancelli con 2 ali, perno sfilabile e rondella in ottone
Hinge for steel gate with 2 flags, removable pin and brass washer

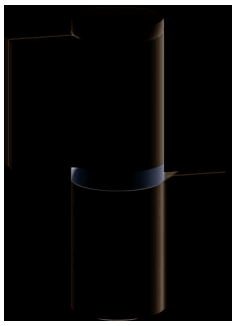

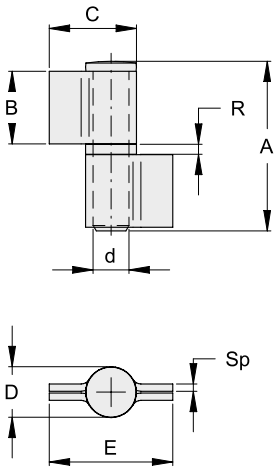

COD.	ART.	A	B	C	E	D	d	Sp	R		FINITURA
VL4130.090.L	145.90	90	40	48	68	28	19.8	4	4	12	lucido/black
VL4130.180.L	145.180	180	85	48	68	28	19.8	4	4	6	lucido/black

VL4131

Cerniera per cancelli con 2 ali , perno sfilabile e cuscinetto
Hinge for steel gate with 2 flags, removable pin and bearing

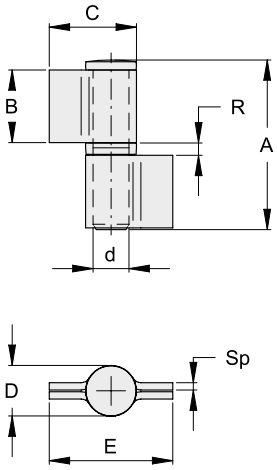

COD.	ART.	A	B	C	E	D	d	Sp	R		FINITURA
VL4131.090.L	150.90	90	40	48	68	28	19.8	4	7	12	lucido/black
VL4131.180.L	150.180	180	85	48	68	28	19.8	4	7	6	lucido/black

VL4132

Cerniera per cancelli con 3 ali, perno sfilabile e 2 rondelle in ottone
Hinge for steel gate with 3 flags, removable pin and 2 brass washers

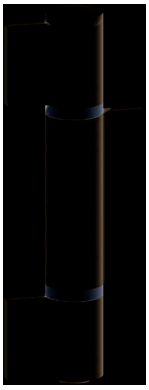

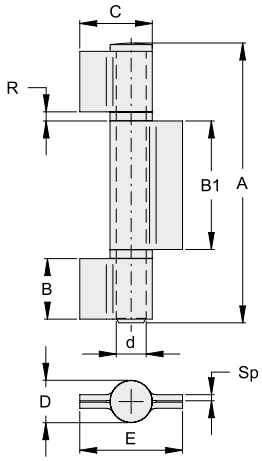

COD.	ART.	A	B	C	E	B1	D	d	Sp	R		FINITURA
VL4132.180.L	155.180	180	40	48	68	85	28	19.8	4	4	6	lucido/black

VL4133

Cerniera per cancelli con 3 ali, perno sfilabile e 2 cuscinetti
Hinge for steel gate with 3 flags, removable pin and 2 bearings

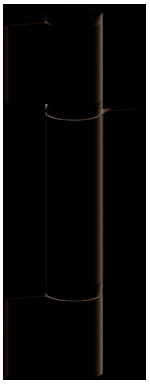

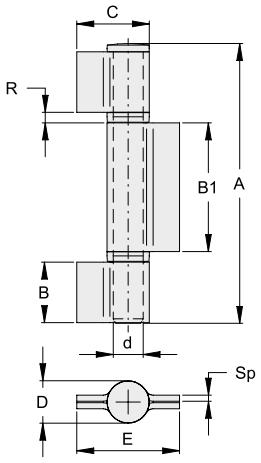

COD.	ART.	A	B	C	E	B1	D	d	Sp	R		FINITURA
VL4133.180.L	160.180	180	40	48	68	85	28	19.8	4	7	6	lucido/black

VL4134

Cerniera per cancelli con 4 ali, perno sfilabile e 3 rondelle in ottone
Hinge for steel gate with 4 flags, removable pin and 3 brass washers

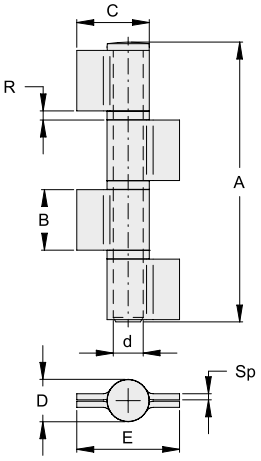

COD.	ART.	A	B	C	E	D	d	Sp	R		FINITURA
VL4134.180.L	165.180	180	40	48	68	28	19.8	4	4	6	lucido/black

VL4135

Cerniera per cancelli con 4 ali, perno sfilabile e 3 cuscinetti
Hinge for steel gate with 4 flags, removable pin and 3 bearings

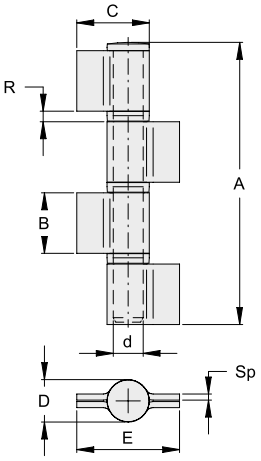

COD.	ART.	A	B	C	E	D	d	Sp	R		FINITURA
VL4135.180.L	170.180	180	40	48	68	28	19.8	4	7	6	lucido/black

VL4140

Cerniera per cancelli con 2 ali ridotte, perno sfilabile e 1 rondella in ottone
Hinge for steel gate with 2 reduced flags, removable pin and 1 brass washer

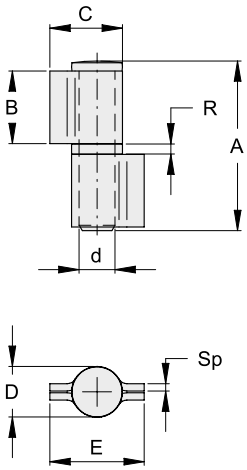

COD.	ART.	A	B	C	E	D	d	Sp	R		FINITURA
VL4140.090.L	175.90	90	40	40	50	28	19.8	4	4	12	lucido/black
VL4140.180.L	175.180	180	85	40	50	28	19.8	4	4	6	lucido/black

VL4141

Cerniera per cancelli con 2 ali ridotte, perno sfilabile e cuscinetto
Hinge for steel gate with 2 reduced flags, removable pin and bearing

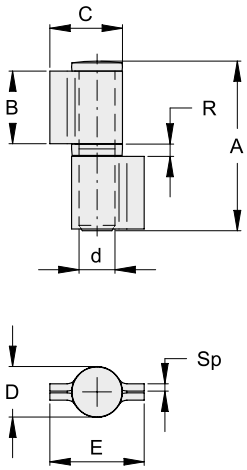

COD.	ART.	A	B	C	E	D	d	Sp	R		FINITURA
VL4141.090.L	180.90	90	40	40	50	28	19.8	4	7	12	lucido/black
VL4141.180.L	180.180	180	85	40	50	28	19.8	4	7	6	lucido/black

VL4142

Cerniera per cancelli con 3 ali ridotte, perno sfilabile e 2 rondelle in ottone
Hinge for steel gate with 3 reduced flags, removable pin and 2 brass washers

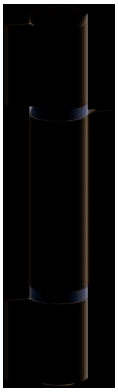

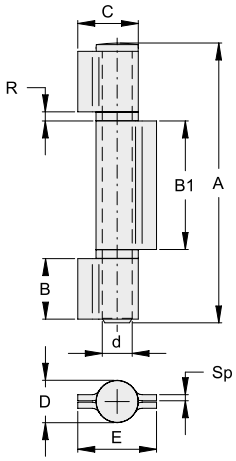

COD.	ART.	A	B	C	E	B1	D	d	Sp	R		FINITURA
VL4142.180.L	185.180	180	40	40	50	85	28	19.8	4	4	6	lucido/black

VL4143

Cerniera per cancelli con 3 ali ridotte, perno sfilabile e 2 cuscinetti
Hinge for steel gate with 3 reduced flags, removable pin and 2 bearings

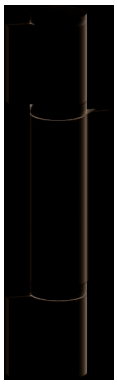

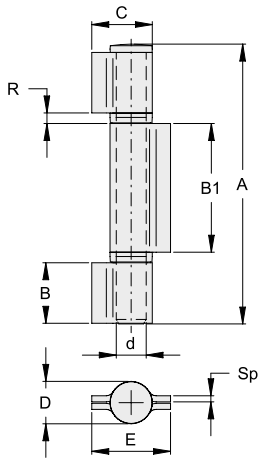

COD.	ART.	A	B	C	E	B1	D	d	Sp	R		FINITURA
VL4143.180.L	190.180	180	40	40	50	85	28	19.8	4	7	6	lucido/black

VL4144

Cerniera per cancelli con 4 ali ridotte, perno sfilabile e 3 rondelle in ottone
Hinge for steel gate with 4 reduced flags, removable pin and 3 brass washers

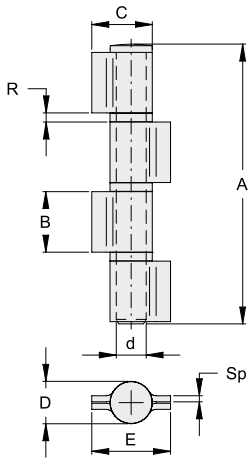

COD.	ART.	A	B	C	E	D	d	Sp	R		FINITURA
VL4144.180.L	195.180	180	40	40	50	28	19.8	4	4	6	lucido/black

VL4145

Cerniera per cancelli con 4 ali ridotte, perno sfilabile e 3 cuscinetti
Hinge for steel gate with 4 reduced flags, removable pin and 3 bearings

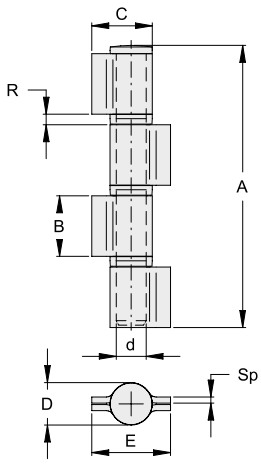

COD.	ART.	A	B	C	E	D	d	Sp	R		FINITURA
VL4145.180.L	200.180	180	40	40	50	28	19.8	4	7	6	lucido/black

VL4200

Cerniera a tappo a 2 ali
Plug hinge with 2 flags

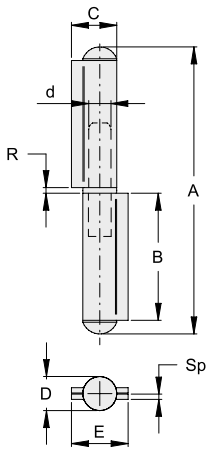

COD.	ART.	A	B	C	D	E	d	Sp	R		FINITURA
VL4200.080.I	1110.80	84	36	17	12	22	7.8	2	2.5	24	inox
VL4200.100.I	1110.100	107	46	18	14	22	8.8	2.2	2.5	24	inox
VL4200.120.I	1110.120	125	56	20	15	25	9.8	2.3	2.5	24	inox
VL4200.140.I	1110.140	148	66	22	16	28	10.8	2.5	3	24	inox
VL4200.060.L	110.60	66	27	16	12	20	7.8	2	2.5	24	lucido/black
VL4200.080.L	110.80	84	36	17	12	22	7.8	2	2.5	24	lucido/black
VL4200.100.L	110.100	107	46	18	14	22	8.8	2.2	2.5	24	lucido/black
VL4200.120.L	110.120	125	56	20	15	25	9.8	2.3	2.5	24	lucido/black
VL4200.140.L	110.140	148	66	22	16	28	10.8	2.5	3	24	lucido/black
VL4200.140.L1	110.140R	146	66	23	17.5	28.5	11.8	2.75	2.5	12	lucido/black
VL4200.170.L	110.170	180	81	23	17	29	11.8	2.7	3	12	lucido/black
VL4200.200.L	110.200	210	96	27	20	34	13.8	3	3.5	12	lucido/black

VL4210

Cerniera a tappo a 2 ali versione destra/sinistra
Plug hinge with 2 flags right/left side

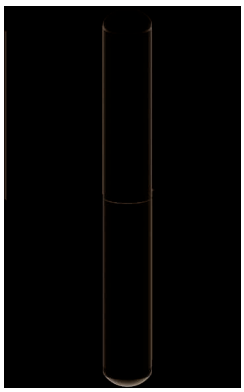

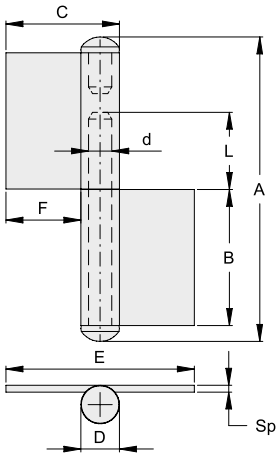

COD.	ART.	A	B	C	D	d	Sp	L	E	F		FINITURA
VL4210.06D.L	240.60D	70	30	32	14	8.2	2.6	12	50	18	20	lucido/black
VL4210.06S.L	240.60S	70	30	32	14	8.2	2.6	12	50	18	20	lucido/black
VL4210.08D.L	240.80D	90	39	32	14	8.2	2.6	24	50	18	20	lucido/black
VL4210.08S.L	240.80S	90	39	32	14	8.2	2.6	24	50	18	20	lucido/black
VL4210.10D.L	240.100D	114	50	50	17	10.2	3	28	83	33	16	lucido/black
VL4210.10S.L	240.100S	114	50	50	17	10.2	3	28	83	33	16	lucido/black
VL4210.12D.L	240.120D	134	60	50	17	10.2	3	34	83	33	16	lucido/black
VL4210.12S.L	240.120S	134	60	50	17	10.2	3	34	83	33	16	lucido/black
VL4210.14D.L	240.140D	155	70	56	20	12.2	3.5	40	92	36	16	lucido/black
VL4210.14S.L	240.140S	155	70	56	20	12.2	3.5	40	92	36	16	lucido/black
VL4210.16D.L	240.160D	175	80	56	20	12.2	3.5	45	92	36	16	lucido/black
VL4210.16S.L	240.160S	175	80	56	20	12.2	3.5	45	92	36	16	lucido/black

Immagine versione destra
Right-hand version image

VL4220

Cerniera a tappo a 2 ali lunghe versione destra/sinistra
Plug hinge with 2 long flags right/left side

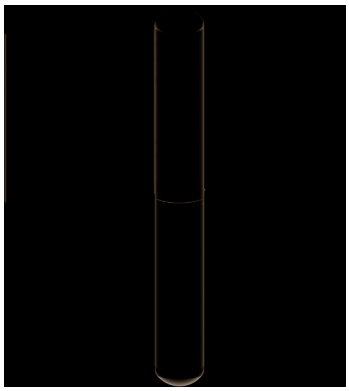

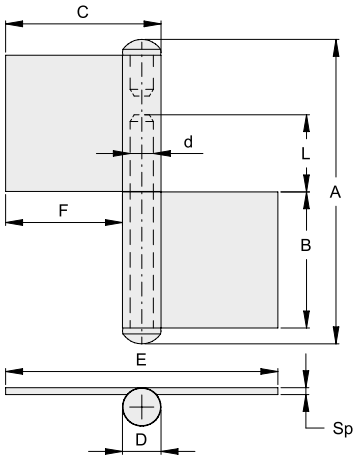

COD.	ART.	A	B	C	D	d	Sp	E	F	L		FINITURA
VL4220.06D.L	245.60D	70	30	62	14	8.2	2.6	110	48	12	12	lucido/black
VL4220.06S.L	245.60S	70	30	62	14	8.2	2.6	110	48	12	12	lucido/black
VL4220.08D.L	245.80D	90	39	62	14	8.2	2.6	110	48	24	12	lucido/black
VL4220.08S.L	245.80S	90	39	62	14	8.2	2.6	110	48	24	12	lucido/black
VL4220.10D.L	245.100D	114	50	68	17	10.2	3	120	53	28	12	lucido/black
VL4220.10S.L	245.100S	114	50	68	17	10.2	3	120	53	28	12	lucido/black
VL4220.12D.L	245.120D	134	60	68	17	10.2	3	120	53	34	12	lucido/black
VL4220.12S.L	245.120S	134	60	68	17	10.2	3	120	53	34	12	lucido/black
VL4220.14D.L	245.140D	155	70	85	20	12.2	3.5	150	65	40	10	lucido/black
VL4220.14S.L	245.140S	155	70	85	20	12.2	3.5	150	65	40	10	lucido/black
VL4220.16D.L	245.160D	175	80	85	20	12.2	3.5	150	65	45	10	lucido/black
VL4220.16S.L	245.160S	175	80	85	20	12.2	3.5	150	65	45	10	lucido/black

Immagine versione destra
Right-hand version image

VL4300

Cerniera con profilo a goccia con cuscinetto
Drop profile hinge with bearing

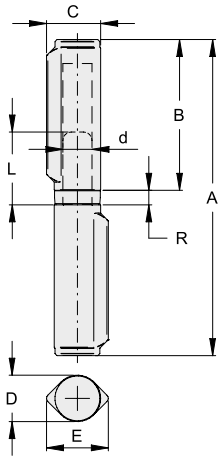

COD.	ART.	A	B	C	R	D	E	d	L		FINITURA
VL4300.140.L	254.18	140	68	19.7	6	17.25	22	10	30	20	lucido/black
VL4300.140.L1	254.20	140	68	24	7	20	28	12	38	12	lucido/black
VL4300.150.L	254.22	150	74	24.5	7	21.75	27.5	14	35	12	lucido/black

VL4301

Cerniera con profilo a goccia perno in acciaio e rondella in ottone
Drop profile hinge with steel pin and brass washer

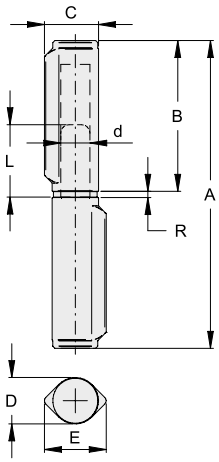

COD.	ART.	A	B	C	R	D	E	d	L		FINITURA
VL4301.040.L	255.40	40	20	10.9	1.5	9	13	6	17	24	lucido/black
VL4301.060.L	255.60	60	29	10.9	2	9.25	12.5	6	17	24	lucido/black
VL4301.080.L	255.80	80	40	13.2	2	11.25	15	7	23	24	lucido/black
VL4301.100.L	255.100	100	48	15.6	2	13.25	18	8	25	24	lucido/black
VL4301.120.L	255.120	120	58	17.7	2.5	15.25	20	9	28	24	lucido/black
VL4301.140.L	255.140	140	68	17.7	2.5	15.25	20	9	28	24	lucido/black
VL4301.140.L1	255.18	140	68	19.7	2.5	17.25	22	10	28	20	lucido/black
VL4301.140.L2	255.20	140	68	24	3	20	28	12	38	12	lucido/black
VL4301.150.L	255.22	150	74	24.5	3	21.75	27	14	35	12	lucido/black

VL4302

Cerniera con profilo a goccia con perno e rondella in ottone
Drop profile hinge with brass pin and washer

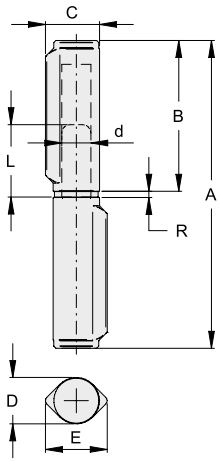

COD.	ART.	A	B	C	R	D	E	d	L		FINITURA
VL4302.040.L	256.40	40	20	10.9	1.5	9	13	6	17	24	lucido/black
VL4302.060.L	256.60	60	29	10.9	2	9.25	12.5	6	17	24	lucido/black
VL4302.080.L	256.80	80	40	13.2	2	11.25	15	7	23	24	lucido/black
VL4302.100.L	256.100	100	48	15.6	2	13.25	18	8	25	24	lucido/black
VL4302.120.L	256.120	120	58	17.7	2.5	15.25	20	9	28	24	lucido/black
VL4302.140.L	256.140	140	68	17.7	2.5	15.25	20	9	28	24	lucido/black
VL4302.140.L1	256.18	140	68	19.7	2.5	17.25	22	10	28	20	lucido/black
VL4302.140.L2	256.20	140	68	24	3	20	28	12	38	12	lucido/black
VL4302.150.L	256.22	150	74	24.5	3	21.75	27	14	35	12	lucido/black

VL4303

Cerniera con profilo a goccia perno in ottone e cuscinetto
Drop profile hinge with brass pin and bearing

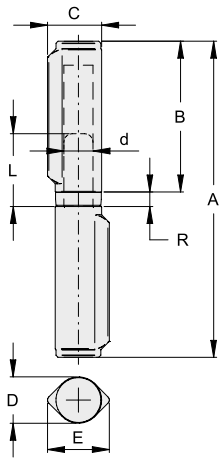

COD.	ART.	A	B	C	R	D	E	d	L		FINITURA
VL4303.140.L	257.18	140	68	19.7	6	17.25	22	10	28	20	lucido/black
VL4303.140.L1	257.20	140	68	24	7	20	28	12	38	12	lucido/black
VL4303.150.L	257.22	150	74	24.5	7	21.75	27	14	35	12	lucido/black

VL4304

Cerniera con profilo a goccia perno in acciaio regolabile con cuscinetto
Drop profile hinge with bearing and adjustable steel pin

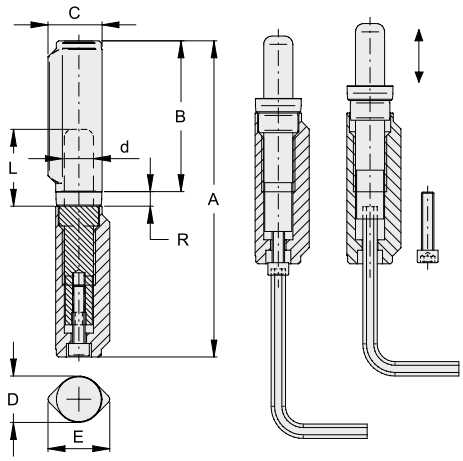

COD.	ART.	A	B	C	R	D	E	d	L		FINITURA
VL4304.150.L	258.22	150-160	74	24.5	7	21.75	27	14	37	12	lucido/black

VL4400

Cerniera stampata a 2 ali a saldare
Moulded 2 flags hinge to weld

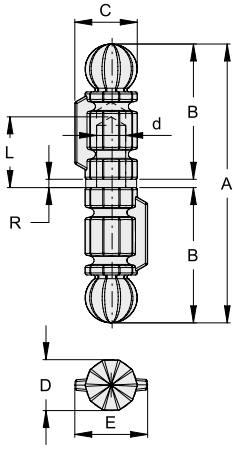

COD.	ART.	A	B	C	R	D	E	d	L		FINITURA
VL4400.105.L	5100.105	112	54.5	25.5	3	22	29	12	29	10	lucido/black
VL4400.125.L	5100.125	133	65	30	3	25	35	14	33	10	lucido/black
VL4400.150.L	5100.150	158	77.5	37	3	30	44	16	41	10	lucido/black

Cerniere speciali
Special hinges

VL4900

Cerniera per finestre vasistas a saldare
Hinge for windows vasistas to weld

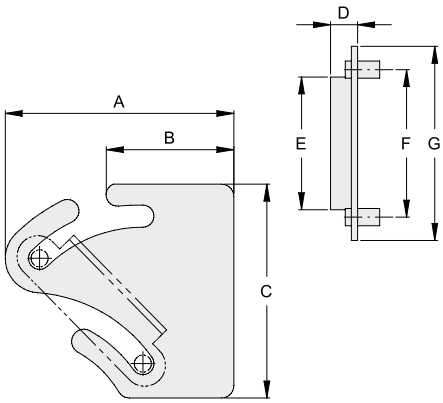

COD.	ART.	A	B	C	D	E	F	G		FINITURA
VL4900.001.L	275.65	75	41.5	66	14	44	42	59	20	lucido/black
VL4900.002.L	275.85	93	52	87	14	54	60	79	20	lucido/black

VL5100

Fermaporta a pedale piccolo
Pedal door stopper small

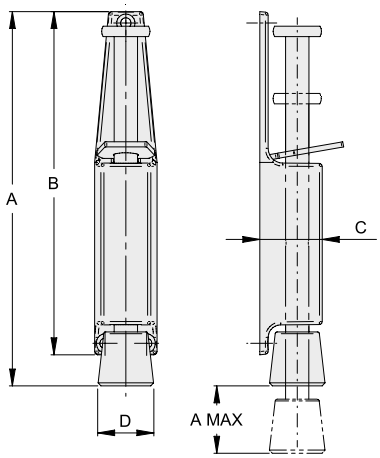

COD.	ART.	A	A MAX	B	C	D	Kg		FINITURA
VL5100.001.V	330	130	30	120	25	20	25	6	vern./painted
VL5100.002.V	331	180	50	165	30	27	40	6	vern./painted

VL5101

Fermaporta a pedale modello pesante
Pedal type door stopper heavy duty

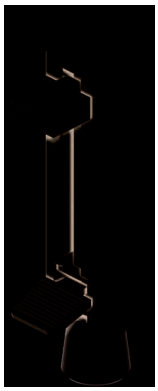

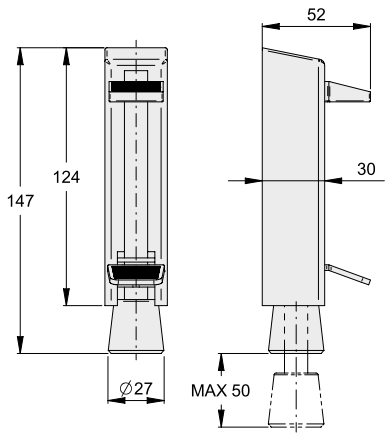

COD.	ART.	Kg		FINITURA
VL5101.002.V	332	60	6	vern./painted

VL6100

Molla chiudi porta
Spring doorcloser

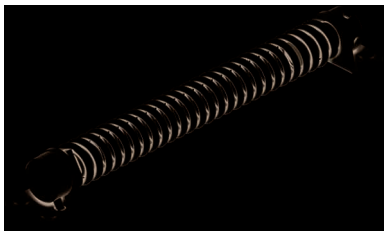

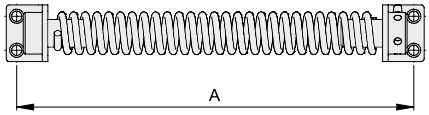

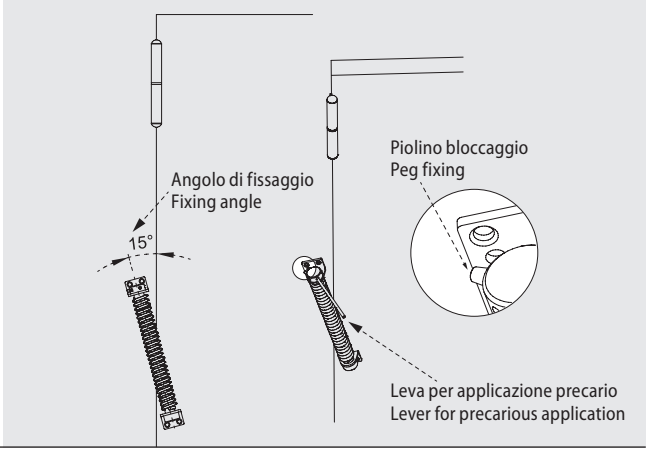

COD.	ART.	A	Kg		FINITURA
VL6100.200	389.200	210	40	10	zinc./galv.
VL6100.280	389.280	270	60	10	zinc./galv.

Chiudicancello
Gateclosers

VL6200 NEW

Chiudicancello oleodinamico interno
Oleodynamic internal gatecloser

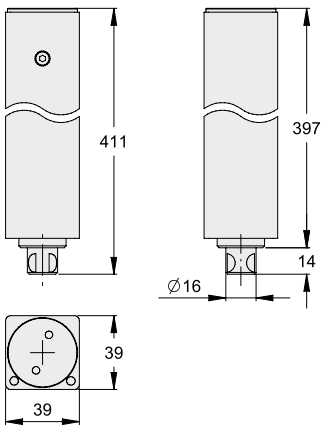

COD.	ART.		FINITURA
VL6200.001	388.I	1	zinc./galv.

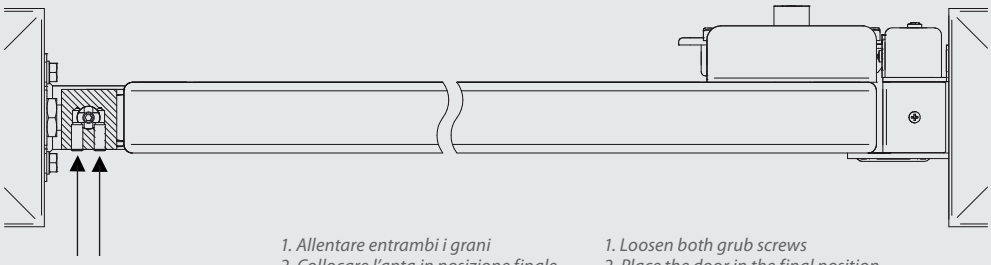

Grani di regolazione
Grub screws

1. Allentare entrambi i grani
2. Collocare l'anta in posizione finale
3. Fissare i grani

1. Loosen both grub screws
2. Place the door in the final position
3. Screw both grub screws into place without tightening up to gatecloser pin; once on position, tighten until fixed.

VL6202 NEW

Piastra regolabile inferiore a saldare per chiudicancello oledinamico interno
Bottom adjustable hinge to weld for oleodynamic internal gatecloser

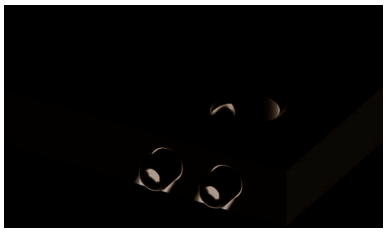

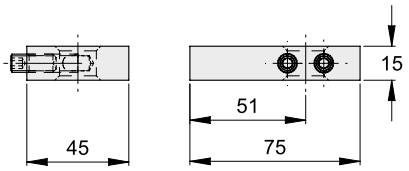

COD.	ART.		FINITURA
VL6202.001	255.30S.1	1	zinc./galv.

VL6203 NEW

Piastra regolabile inferiore a fissare per chiudicancello oleodinamico interno
Bottom adjustable hinge to fix for oleodynamic internal gatecloser

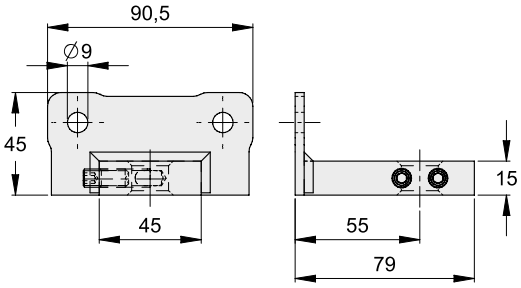

COD.	ART.		FINITURA
VL6203.001	255.30P.1	1	zinc./galv.

VL6210 NEW

Chiudicancello oleodinamico esterno
External oleodynamic gatecloser

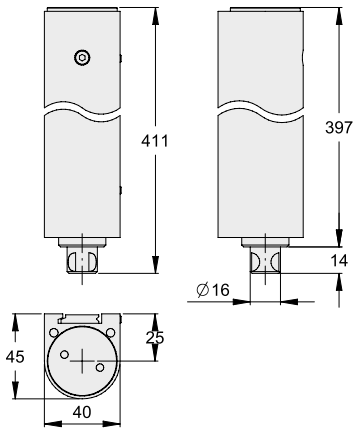

COD.	ART.		FINITURA
VL6210.001	388.E	1	zinc./galv.

VL6211 NEW

Cardine superiore a saldare per chiudicancello oleodinamico esterno
Upper hinge to weld for external oleodynamic gatecloser

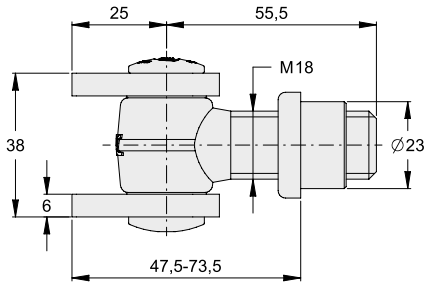

COD.	ART.		FINITURA
VL6211.A18	432.1	1	zinc./galv.

VL6212 NEW

Piastra regolabile inferiore a saldare per chiudicancello esterno oledinamico
Bottom adjustable hinge to weld for oledynamic external gatecloser

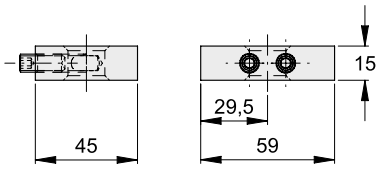

COD.	ART.		FINITURA
VL6212.001	122.1	1	zinc./galv.

VL6213 NEW

Piastra regolabile inferiore a fissare per chiudicancello oledinamico esterno
Bottom adjustable hinge to fix for oleodynamic external gatecloser

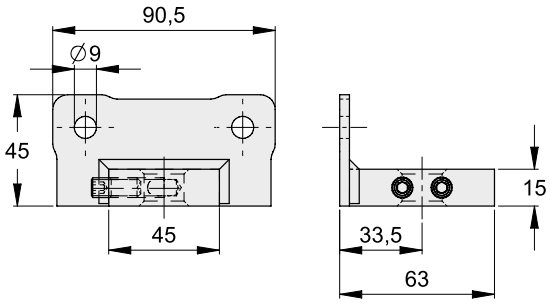

COD.	ART.		FINITURA
VL6213.001	122P.1	1	zinc./galv.

VL9000

Punta per cancellate
Steel spear for gates and fences

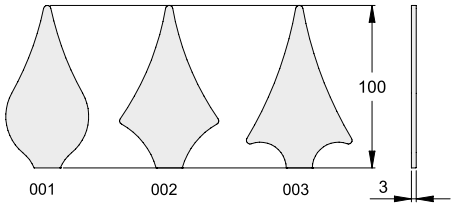

COD.	ART.		FINITURA
VL9000.001.L	156	100	lucido/black
VL9000.002.L	157	100	lucido/black
VL9000.003.L	158	100	lucido/black

VL9010

Copriangolo retto per porte e finestre
Angle cover for doors and windows

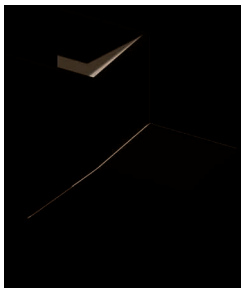

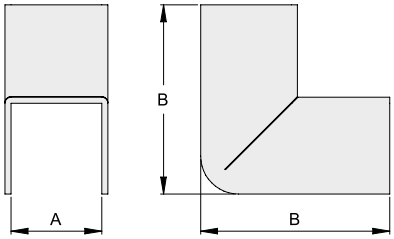

COD.	ART.	A	B		FINITURA
VL9010.010	A10	10	24	500	zinc./galv.
VL9010.012	A12	12	25	500	zinc./galv.

VL9011

Copriangolo arrotondato per porte e finistre
Rounded angle cover for doors and windows

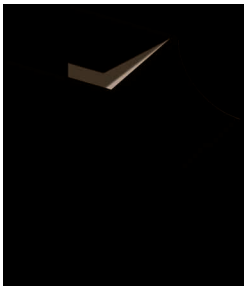

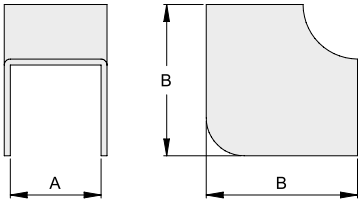

COD.	ART.	A	B		FINITURA
VL9011.012	B12	12	20	500	zinc./galv.

VL9301

Cardine con regolazione a gradini
Double bracket adjustable hinge

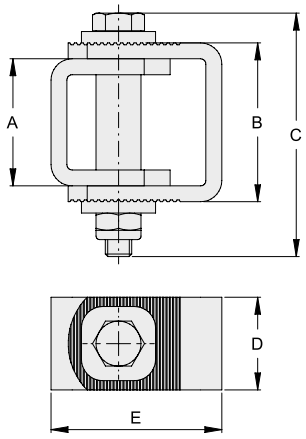

COD.	ART.	A	B	C	D	E		FINITURA
VL9301.030	370P	30	45	78	30	53-61	12	zinc./galv.
VL9301.040	370G	48	60	92	35	58-71	10	zinc./galv.


5
AREA
PRODOTT
FINITI

ARTICOLI DI RICAMBIO

Spare sparts

Anche i codici della categoria RICAMBI seguono la struttura della nuova codifica articoli.
La tabella che segue affianca ai codici ricambio una colonna con le misure di riferimento del prodotto cui và destinato e un'ultima colonna ART. con i principali articoli finiti, o loro famiglie, cui si può abbinare il ricambio.
Nel caso compaia solo la famiglia, sono abbinabili tutti i prodotti appartenenti alla stessa.

Even the codes of the category SPARE PARTS follow the architecture of the new codification.
The following table combines the unique parts, a column with the reference measurements of the product and a last column ART. along with principle finished articles, or its families, which can be combined with the spare parts.
If a given family is shown then, all products contained within the family can be combined.

Tutte le misure sono espresse in mm dove non diversamente specificato.
All measurements are in mm unless otherwise specified.

** Dove non specificato i perni e le boccole sono gli stessi per le ruote Gola a V e a U.*
** Pins and bushings are the same for U and V groove wheels unless otherwise specified.*

RA1001*

COD.	mis. di rif. | ref. measurem	ART.			
RA1001.C08	d.40-d.50 ruote zinc./nylon d.40-d.50 wheels galv./nylon	VA1401	VA1101		
RA1001.D10		VA1101.060	VA1301.060		
RA1001.D10.1	d.60 ruote zinc./nylon d.60 wheels galv./nylon	VA1101.060.N VA1410.060	VA1301.060.N	VA1310.060	VA1401.060.N
RA1001.F12	per tubolare 40 for tubular 40	VA1101.090 VA1301.090.3 VA1401.100	VA1101.120 VA1301.100	VA1201.090 VA1301.120	VA1301.090 VA1401.090
RA1001.F12.1		VA1310.075 VA1410.075	VA1310.090 VA1410.090	VA1310.100 VA1410.100	VA1310.120 VA1410.120
RA1001.F12.3		VA1101.075	VA1301.075		
RA1001.F12.4	per tubolare 50 for tubular 50	idem per/idem as for RA1001.F12			
RA1001.F14.2		VA1101.090.2 VA1301.100.2	VA1101.100.2 VA1401.090.2	VA1101.120.2 VA1401.100.2	VA1301.090.2 VA1401.120.2
RA1001.F14.3		VA1101.140 VA1301.120.3	VA1101.140.2 VA1301.140	VA1201.140 VA1401.140.2	VA1201.140.2 VA1401.160.2
RA1001.G16.2		VA1101.160.2	VA1101.200.2	VA1401.160.3	VA1401.200.2
RA1001.H16		VA1101.160	VA1101.200	VA1301.160	

RA1002*

COD.	mis. di rif. | ref. measurem	ART.			
RA1002.H21		VA1102.090	VA1402.090		
RA1002.I20.3	per tubolare 80 for tubular 80	idem per/idem as for RA1002.I23			
RA1002.I23		VA1102.120 VA1202.160 VA1402.200	VA1102.160 VA1202.200	VA1102.200 VA1402.120	VA1202.120 VA1402.160
RA1002.I24		VA1102.250	VA1102.300	VA1402.250	VA1402.300
RA1002.I24.2		VA1102.250.2	VA1102.300.2	VA1402.250.2	VA1402.300.2
RA1002.I24.3	per tubolare 80 for tubular 80	idem per/idem as for RA1002.I24			

RA1003*

COD.	mis. di rif. | ref. measurem	ART.		
RA1003.I05	questo ricambio và in aggiunta ai seguenti codici ricambi: this spare part matches to the following codes as addition:	RA1002.I23	RA1002.I24	RA1002.I24.2
RA1003.I10	questo ricambio và in aggiunta ai seguenti codici ricambi: this spare part matches to the following codes as addition:	RA1002.I23	RA1002.I24	RA1002.I24.2

RA1111*

COD.	mis. di rif. | ref. measurem	ART.			
RA1111.D10	d.60 ruote zinc./nylon d.60 wheels galv./nylon	VA1101.060 VA1301.060.N	VA1101.060.N VA1401.060.N	VA1201.060	VA1301.060
RA1111.F12		VA1101.075 VA1301.075 VA1301.100	VA1101.090 VA1301.090 VA1401.090	VA1101.120 VA1301.090.3 VA1401.100	VA1101.100 VA1301.120
RA1111.F14.2	d.90-d.120 con 2 cuscinetti d.90-d.120 with 2 ball bearings	VA1101.090.2 VA1301.090.2 VA1401.090.2	VA1101.100.2 VA1301.100.2 VA1401.100.2	VA1101.120.2 VA1301.120.3 VA1401.120.2	VA1101.140 VA1301.140
RA1111.F14.4		VA1101.140.2 VA1401.160.2	VA1101.160.3	VA1101.200.3	VA1401.140.2
RA1111.G16.2		VA1101.160 VA1301.160	VA1101.160.2 VA1401.160.3	VA1101.200 VA1401.200.2	VA1101.200.2

RA1112*

COD.	mis. di rif. | ref. measurem	ART.			
RA1112.H21		VA1102.090	VA1302.090	VA1402.090	
RA1112.I23		VA1102.120 VA1402.160	VA1102.160 VA1402.200	VA1102.200	VA1402.120
RA1112.I23.3	per tubolare 80 for tubular 80	idem per/idem for RA1112.I23			
RA1112.I24		VA1102.250	VA1102.300	VA1402.250	VA1402.300
RA1112.I24.2		VA1102.250.2	VA1102.300.2	VA1402.250.2	

** Dove non specificato i perni e le boccole sono gli stessi per le ruote Gola a V e a U.*
** Pins and bushings are the same for U and V groove wheels unless otherwise specified.*

RA1121*

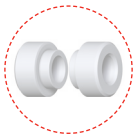

COD.	mis. di rif. | ref. measurem	ART.			
RA1121.D10		VA1101.060	VA1301.060		
RA1121.D10.1		VA1101.060.N	VA1301.060.N	VA1401.060.N	
RA1121.F12		VA1101.090 VA1301.090.3 VA1401.100	VA1101.100 VA1301.100	VA1101.120 VA1301.120	VA1301.090 VA1401.090
RA1121.F12.3		VA1101.075	VA1301.075		
RA1121.F14.2		VA1101.090.2 VA1301.100.2	VA1101.100.2 VA1401.090.2	VA1101.120.2 VA1401.100.2	VA1301.090.2 VA1401.120.2
RA1121.F14.3		VA1101.140	VA1301.140	VA1301.120.3	
RA1121.F14.4		VA1101.140.2 VA1401.160.2	VA1101.160.3	VA1101.200.3	VA1401.140.2
RA1121.G16.2		VA1101.160.2	VA1101.200.2	VA1401.160.3	VA1401.200.2
RA1121.H16		VA1101.160	VA1101.200	VA1301.160	

RA1122*

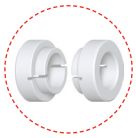

COD.	mis. di rif. | ref. measurem	ART.			
RA1122.H21		VA1102.090	VA1302.090	VA1402.090	
RA1122.I23		VA1102.120 VA1402.160	VA1102.160 VA1402.200	VA1102.200	VA1402.120

RA3001

COD.	mis. di rif. | ref. measurem	ART.	
RA3001.A25.N		VA3101.A25	
RA3001.A30.N		VA3101.A30	VA3101.A30.I
RA3001.A40.N		VA3101.A40	VA3101.A40.I
RA3001.B40.N		VA3101.B40	VA3101.B40.I
RA3001.I52.N		VA3104.I52	
RA3001.I60.N		VA3101.I60	VA3101.I60.I
RA3001.N34.N		VA3103.N34	
RA3001.N38.N		VA3103.N38	

RA4003

COD.	mis. di rif. | ref. measurem	ART.			
RA4003.025		VA4101.092	VA4101.092.I	VA4102.101	VA4102.101.I
RA4003.030		VA4101.115 VA4102.121.I	VA4101.115.I	VA4102.121	VA4102.108

RA4012

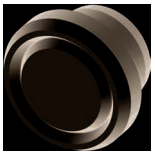

COD.	mis. di rif. | ref. measurem	ART.			
RA4012.017		VA4201 VD1203	VA4202 VD2300	VA4203	VD1200

RC1001

COD.	mis. di rif. | ref. measurem	ART.			
RC1001.018.I	M18 inox	VC1101.A18.I	VC1201.A18.I		
RC1001.018.L	M18	VC1101.A18 VC1301.A18	VC1201.A18 VC1401.A18	VC1213.A18 VL6211.A18	VC1214.A18
RC1001.020.L	M20	VC1101.A20	VC1201.A20	VC1214.A20	
RC1001.022.I	M22 inox	VC1101.A22.I	VC1201.A22.I		
RC1001.022.L	M22	VC1101.A22 VC1301.A22	VC1201.A22 VC1401.A22	VC1213.A22	VC1214.A22
RC1001.024.L	M24	VC1101.A24	VC1201.A24	VC1214.A24	
RC1001.027.L	M27	VC1101.A27 VC1401.A27	VC1201.A27	VC1213.A27	VC1301.A27

RC1002

COD.	mis. di rif. | ref. measurem	ART.			
RC1002.018	M18	VC1104.A18	VC1204.A18	VC1304.A18	VC1404.A18
RC1002.020	M20	VC1104.A20	VC1204.A20		
RC1002.022	M22	VC1104.A22	VC1204.A22	VC1304.A22	VC1404.A22
RC1002.024	M24	VC1104.A24	VC1204.A24		
RC1002.027	M27	VC1104.A27	VC1204.A27	VC1304.A27	VC1404.A27

RC1003

COD.	mis. di rif. | ref. measurem	ART.	
RC1003.018		VC1102.A18	VC1202.A18
RC1003.020		VC1102.A20	VC1202.A20
RC1003.022		VC1102.A22	VC1202.A22
RC1003.024		VC1102.A24	VC1202.A24
RC1003.027		VC1102.A27	VC1202.A27

RC1004

COD.	mis. di rif. | ref. measurem	ART.	
RC1004.018		VC1120.B18	VC1220.A18
RC1004.020		VC1120.B18	VC1220.A18
RC1004.022		VC1120.B18	VC1220.A18

RC1011

COD.	mis. di rif. | ref. measurem	ART.			
RC1011.018		VC1110.A18	VC1210.A18	VC1310.A18	VC1410.A18
RC1011.022		VC1110.A18	VC1210.A18	VC1310.A18	VC1410.A18

RC1013

COD.	mis. di rif. | ref. measurem	ART.			
RC1013.018		VC1109.A18	VC1209.A18	VC1309.A18	VC1409.A18
RC1013.020		VC1109.A20	VC1209.A20		
RC1013.022		VC1109.A22	VC1209.A22	VC1309.A22	VC1409.A22
RC1013.024		VC1109.A24	VC1209.A24		

RC1021

COD.	mis. di rif. | ref. measurem	ART.			
RC1021.018		VC1107.A18	VC1207.A18	VC1307.A18	VC1407.A18
RC1021.020		VC1107.A20	VC1207.A20		
RC1021.022		VC1107.A22	VC1207.A22	VC1307.A22	VC1407.A22
RC1021.024		VC1107.A24	VC1207.A24		
RC1021.027		VC1107.A27	VC1207.A27	VC1307.A27	VC1407.A27

RC1022

COD.	mis. di rif. | ref. measurem	ART.			
RC1022.018		VC1108.A18	VC1208.A18	VC1308.A18	VC1408.A18
RC1022.020		VC1108.A20	VC1208.A20		
RC1022.022		VC1108.A22	VC1208.A22	VC1308.A22	VC1408.A22
RC1022.024		VC1108.A24	VC1208.A24		
RC1022.027		VC1108.A27	VC1208.A27	VC1308.A27	VC1408.A27

RC1023

COD.	mis. di rif. | ref. measurem	ART.			
RC1023.018		VC1105.A18	VC1205.A18	VC1305.A18	VC1405.A18
RC1023.020		VC1105.A20	VC1205.A20		
RC1023.022		VC1105.A22	VC1205.A22	VC1305.A22	VC1405.A22
RC1023.024		VC1105.A24	VC1205.A24		
RC1023.027		VC1105.A27	VC1205.A27	VC1305.A27	VC1405.A27

RC1024

COD.	mis. di rif. | ref. measurem	ART.			
RC1024.018		VC1106.A18	VC1206.A18	VC1306.A18	VC1406.A18
RC1024.020		VC1106.A20	VC1206.A20		
RC1024.022		VC1106.A22	VC1206.A22	VC1306.A22	VC1406.A22
RC1024.024		VC1106.A24	VC1206.A24		
RC1024.027		VC1106.A27	VC1206.A27	VC1306.A27	VC1406.A27

RC1031

COD.	mis. di rif. | ref. measurem	ART.	
RC1031.018		VC1214.A18	VC1214.A20
RC1031.022		VC1214.A22	

RC1032

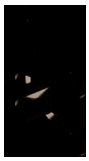

COD.	mis. di rif. | ref. measurem	ART.
RC1032.018		VC1213.A18
RC1032.022		VC1213.A22
RC1032.027		VC1213.A27

RC1041

COD.	mis. di rif. | ref. measurem	ART.
RC1041.018		idem per / idem for RC1021.018
RC1041.022		idem per / idem for RC1021.022

RC1042

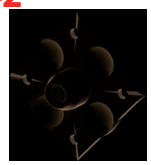

COD.	mis. di rif. | ref. measurem	ART.
RC1042.018		idem per / idem for RC1021.018
RC1042.022		idem per / idem for RC1021.022

RC1101

COD.	mis. di rif. | ref. measurem	ART.			
	M18+M20	VC1101.A18	VC1102.A18	VC1102.A20	VC1103.D18
		VC1103.D20	VC1104.A18	VC1104.A20	VC1105.A18
		VC1105.A20	VC1106.A18	VC1106.A18	VC1107.A18
		VC1107.A18	VC1108.A18	VC1108.A20	VC1109.A18
		VC1109.A20	VC1110.A18	VC1110.A20	VC1111.A18
		VC1111.A20	VC1112.A18	VC1112.A20	VC1120.B18
		VC1120.B20			
RC1101.022.L	M22+M24	VC1101.A22	VC1102.A22	VC1103.D22	VC1104.A22
		VC1105.A22	VC1106.A22	VC1107.A22	VC1108.A22
		VC1109.A22	VC1110.A22	VC1111.A22	VC1112.A22
		VC1120.B22			
RC1101.027.L	M27	VC1101.A27	VC1102.A27	VC1104.A27	VC1105.A27
		VC1106.A27	VC1107.A27	VC1108.A27	

RC1102

COD.	mis. di rif. | ref. measurem	ART.			
RC1102.018.L	M18+M20	VC1201.A18	VC1201.A20	VC1202.A18	VC1202.A20
		VC1203.A18	VC1203.A20	VC1204.A18	VC1204.A20
		VC1205.A18	VC1205.A20	VC1206.A18	VC1206.A20
		VC1207.A18	VC1207.A20	VC1208.A18	VC1208.A20
		VC1209.A18	VC1209.A20	VC1210.A18	VC1210.A20
		VC1211.A18	VC1211.A20	VC1212.A18	VC1212.A20
		VC1220.A18	VC1220.A20	VC3201.C18	
RC1102.022.L	M22	VC1201.A22	VC1202.A22	VC1203.A22	VC1204.A22
		VC1205.A22	VC1206.A22	VC1207.A22	VC1208.A22
		VC1209.A22	VC1210.A22	VC1211.A22	VC1212.A22
		VC1220.A22	VC3201.A22		
RC1102.024.L	M24	VC1201.A24	VC1202.A24	VC1203.A24	VC1204.A24
		VC1205.A24	VC1206.A24	VC1207.A24	VC1208.A24
		VC1209.A24	VC1210.A24	VC1211.A24	VC1212.A24
RC1102.027.L	M27	VC1201.A27	VC1202.A27	VC1204.A27	VC1205.A27
		VC1206.A27	VC1207.A27	VC1208.A27	VC3201.C27

RC1103

COD.	mis. di rif. | ref. measurem	ART.			
RC1103.018	M18	VC1301.A18	VC1302.A18	VC1304.A18	VC1305.A18
		VC1306.A18	VC1307.A18	VC1308.A18	VC1309.A18
		VC1310.A18	VC1311.A18	VC1312.A18	VC1330.A18
RC1103.022	M22	VC1301.A22	VC1302.A22	VC1304.A22	VC1305.A22
		VC1306.A22	VC1307.A22	VC1308.A22	VC1309.A22
		VC1310.A22	VC1311.A22	VC1312.A22	VC1330.A22
RC1103.027	M27	VC1301.A27	VC1302.A27	VC1304.A27	VC1305.A27
		VC1306.A27	VC1307.A27	VC1308.A27	VC1330.A27

RC1201

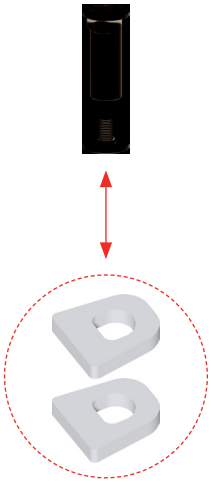

COD.	mis. di rif. | ref. measurem	ART.			
RC1201.A18	M18	VC1101.A18	VC1102.A18	VC1103.D18	VC1104.A18
		VC1105.A18	VC1106.A18	VC1107.A18	VC1108.A18
		VC1109.A18	VC1110.A18	VC1111.A18	VC1112.A18
		VC1120.B18	VL6211.A18		
RC1201.A20	M20	VC1101.A20	VC1102.A20	VC1103.D20	VC1104.A20
		VC1105.A20	VC1106.A20	VC1107.A20	VC1108.A20
		VC1109.A20	VC1110.A20	VC1111.A20	VC1112.A20
		VC1120.B20			
RC1201.A22	M22	VC1101.A22	VC1102.A22	VC1103.A22	VC1104.A22
		VC1105.A22	VC1106.A22	VC1107.A22	VC1109.A22
		VC1110.A22	VC1111.A22	VC1112.A22	VC1120.A22
RC1201.A24	M24	VC1101	VC1102	VC1103	VC1104
		VC1105	VC1106	VC1107	VC1108
		VC1109	VC1110	VC1111	VC1112
RC1201.A27	M27	VC1101.A27	VC1102.A27	VC1104.A27	VC1105.A27
		VC1106.A27	VC1107.A27	VC1108.A27	

RC1202

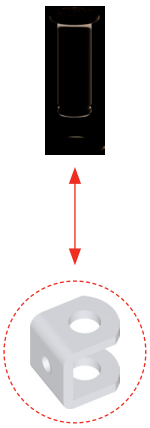

COD.	mis. di rif. | ref. measurem	ART.			
RC1202.A18	cavallotto m18+M20 support bracket M18+M20	VC1201.A18	VC1201.A20	VC1202.A18	VC1202.A20
		VC1203.A18	VC1203.A20	VC1204.A18	VC1204.A20
		VC1205.A18	VC1205.A20	VC1206.A18	VC1206.A20
		VC1207.A18	VC1208.A18	VC1208.A20	VC1209.A18
		VC1209.A20	VC1210.A18	VC1211.A18	VC1211.A20
		VC1212.A18	VC1212.A20	VC1213.A18	VC1214.A18
		VC1214.A20	VC3102.C16	VC3201.C18	
RC1202.A22	cavallotto M22 support bracket M22	VC1201.A22	VC1202.A22	VC1203.A22	VC1204.A22
		VC1205.A22	VC1206.A22	VC1207.A22	VC1208.A22
		VC1209.A22	VC1210.A22	VC1211.A22	VC1212.A22
		VC1213.A22	VC1214.A22	VC1220.A22	VC3201.C22
RC1202.A27	cavallotto M27 support bracket M27	VC1201.A27	VC1202.A27	VC1204.A27	VC1205.A27
		VC1206.A27	VC1207.A27	VC1208.A27	VC1213.A27
		VC3201.C27			
RC1202.B18		VC3101.C18			
RC1202.B22		VC3101.C22			
RC1202.B27		VC3101.C27			

RC4401

COD.	mis. di rif. | ref. measurem	ART.	
RC4401.040		VC4101.040	VC4111.040
RC4401.050		VC4101.050	VC4111.050
RC4401.060		VC4101.060	VC4111.060
RC4401.070		VC4101.070	VC4111.070
RC4401.090		VC4101.090	VC4111.090

RC4402

COD.	mis. di rif. | ref. measurem	ART.	
RC4402.060		VC4103.060	VC4113.060
RC4402.070		VC4103.070	VC4113.070

RC4702

COD.	mis. di rif. | ref. measurem	ART.			
RC4702.050		VC4202.050	VC4202.050.I	VC4212.050	VC4222.050
		VC4232.050			
RC4702.060		VC4202.060	VC4202.060.I	VC4203.060	VC4212.060
		VC4213.060	VC4222.060	VC4232.060	VC4233.060
RC4702.070		VC4202.070	VC4203.070	VC4212.070	VC4213.070
		VC4222.070	VC4223.070	VC4232.070	VC4233.070
RC4702.090		VC4202.090	VC4212.090		

RC4801

COD.	mis. di rif. | ref. measurem	ART.			
RC4801.050		VC4202.050	VC4202.050.I	VC4212.050	VC4222.050
		VC4232.050			
RC4801.060		VC4212.060	VC4202.060.I	VC4203.060	VC4202.060
		VC4213.060	VC4222.060	VC4232.060	VC4233.060
RC4801.070		VC4202.070	VC4203.070	VC4212.070	VC4213.070
		VC4222.070	VC4223.070	VC4232.070	VC4233.070

RC4802

COD.	mis. di rif. | ref. measurem	ART.	
RC4802.090		VC4202.090	VC4212.090

RC5001

COD.	mis. di rif. | ref. measurem	ART.			
RC5001.002.G		VC5200	VC5201	VC5202	VC5210
		VC5211			

ART.	COD.		PAG.
100.60	**VL4100.060.L**	24	174
100.80	**VL4100.080.L**	24	174
100.100	**VL4100.100.L**	24	174
100.120	**VL4100.120.L**	24	174
100.140	**VL4100.140.L**	24	174
100.140R	**VL4100.140.L1**	12	174
100.170	**VL4100.170.L**	12	174
100.200	**VL4100.200.L**	12	174
101	**VA1107.075**	6	22
101.60	**VA1107.060**	10	22
101.60/12	**VA1407.060**	10	31
101/16	**VA1307.060**	6	28
101/20	**VA1407.075**	6	31
102	**VA1207.075**	6	25
102.60	**VA1207.060**	10	25
103	**VA1102.090**	6	20
103/16	**VA1302.090**	6	26
103/20	**VA1402.090**	6	29
104	**VA1202.090**	6	23
105	**VA1102.120**	2	20
105.80	**VL4101.080.L**	24	174
105.100	**VL4101.100.L**	24	174
105.120	**VL4101.120.L**	24	174
105.140	**VL4101.140.L**	24	174
105.140R	**VL4101.140.L1**	12	174
105.170	**VL4101.170.L**	12	174
105.200	**VL4101.200.L**	12	174
105/20	**VA1402.120**	2	29
106	**VA1202.120**	2	23
107	**VA1103.090**	6	20
107/16	**VA1303.090**	6	27
107/20	**VA1403.090**	6	30
109	**VA1203.090**	6	24
110	**VA3102.T30**	30	39
110.60	**VL4200.060.L**	24	182
110.80	**VL4200.080.L**	24	182
110.100	**VL4200.100.L**	24	182
110.120	**VL4200.120.L**	24	182
110.140	**VL4200.140.L**	24	182
110.140R	**VL4200.140.L1**	12	182
110.170	**VL4200.170.L**	12	182
110.200	**VL4200.200.L**	12	182
111	**VA3102.T37**	30	39
112	**VA3103.N38**	30	40
113	**VA3101.A25**	30	39
114	**VA3101.A40**	10	39
114.1	**VA3105.A40**	10	40
114.2	**VA3105.A40.1**	10	40
115	**VA4101.092**	20	49
115.90	**VL4120.090.L**	8	176
115.180	**VL4120.180.L**	4	176
115P	**VA4102.101**	10	50
116	**VA4101.115**	10	49
116A	**VA4103.092**	4	50
116AP	**VA4104.103**	4	50
116GP	**VA4102.121**	10	50
116P	**VA4102.108**	10	50
117	**VA3101.A30**	30	39
118	**VA3101.B40**	10	39
118.1	**VA3105.B40**	1	40
118.4	**VA3106.D40**	10	41
118.5	**VA3107.D40**	6	41
118.6	**VA3106.C40**	10	41
118.7	**VA3107.C40**	4	41
119	**VA3101.I60**	4	39
119.1	**VA3105.I60**	1	40
119.2	**VA3105.I60.1**	1	40
120	**VC2101.020.L**	20	97
120.90	**VL4121.090.L**	8	176
120.180	**VL4121.180.L**	4	176
120/Z	**VC2101.020**	20	97
121	**VC2101.023.L**	12	97
121/Z	**VC2101.023**	12	97
122	**VC2201.020.L**	20	99

ART.	COD.		PAG.
122/Z	**VC2201.020**	20	99
122P	**VC2202.020**	10	99
122.1	**VL6212.001**	1	191
122P.1	**VL6213.001**	1	191
123	**VC2201.023.L**	12	99
123/Z	**VC2201.023**	12	99
123P	**VC2202.023**	6	99
124	**VC2101.028.L**	6	97
124/Z	**VC2101.028**	6	97
125	**VC2201.028.L**	6	99
125.180	**VL4122.180.L**	4	176
125/Z	**VC2201.028**	6	99
125P	**VC2202.028**	4	99
127	**VA1107.100.2**	6	22
127/16	**VA1307.100.2**	6	28
127/20	**VA1407.100.2**	6	31
128	**VA1207.100.2**	6	25
130.180	**VL4123.180.L**	4	177
131.18	**VC1109.A18**	8	82
131.18C	**VC1209.A18**	8	86
131.20	**VC1109.A20**	8	82
131.20C	**VC1209.A20**	8	86
131.22	**VC1109.A22**	6	82
131.22C	**VC1209.A22**	6	86
131.24	**VC1109.A24**	6	82
131.24C	**VC1209.A24**	6	86
131B.18	**VC1111.A18**	8	82
131B.18C	**VC1211.A18**	8	87
131B.20	**VC1111.A20**	8	82
131B.20C	**VC1211.A20**	8	87
131B.22	**VC1111.A22**	6	82
131B.22C	**VC1211.A22**	6	87
131B.24	**VC1111.A24**	6	82
131B.24C	**VC1211.A24**	6	87
132.18	**VC1110.A18**	8	82
132.18C	**VC1210.A18**	8	87
132.20	**VC1110.A20**	8	82
132.20C	**VC1210.A20**	8	87
132.22	**VC1110.A22**	6	82
132.22C	**VC1210.A22**	6	87
132.24	**VC1110.A24**	6	82
132.24C	**VC1210.A24**	6	87
132B.18	**VC1112.A18**	8	83
132B.18C	**VC1212.A18**	8	87
132B.20	**VC1112.A20**	8	83
132B.20C	**VC1212.A20**	8	87
132B.22	**VC1112.A22**	6	83
132B.22C	**VC1212.A22**	6	87
132B.24	**VC1112.A24**	6	83
132B.24C	**VC1212.A24**	6	87
133.18C	**VC1214.A18**	8	88
133.20C	**VC1214.A20**	8	88
133.22C	**VC1214.A22**	4	88
133.24C	**VC1214.A24**	4	88
135.180	**VL4124.180.L**	4	177
138	**VL2100.060.L**	120	168
138/Z	**VL2100.060**	120	168
139	**VL2100.080.L**	50	168
139/Z	**VL2100.080**	50	168
140	**VL2100.100.L**	20	168
140.180	**VL4125.180.L**	4	177
140/Z	**VL2100.100**	20	168
141	**VL2100.120.L**	20	168
141.18	**VC1309.A18**	6	91
141.18D	**VC1409.A18**	6	95
141.22	**VC1309.A22**	4	91
141.22D	**VC1409.A22**	4	95
141/Z	**VL2100.120**	20	168
141B.18	**VC1311.A18**	6	92
141B.18D	**VC1411.A18**	6	95
141B.22	**VC1311.A22**	4	92
141B.22D	**VC1411.A22**	4	95
142	**VL2100.150.L**	40	168
142.18	**VC1310.A18**	6	91

ART.	COD.		PAG.
142.18D	**VC1410.A18**	6	95
142.22	**VC1310.A22**	4	91
142.22D	**VC1410.A22**	4	95
142/Z	**VL2100.150**	40	168
142B.18	**VC1312.A18**	6	92
142B.18D	**VC1412.A18**	6	96
142B.22	**VC1312.A22**	4	92
142B.22D	**VC1412.A22**	4	96
145	**VC5101.070**	40	112
145.90	**VL4130.090.L**	12	178
145.180	**VL4130.180.L**	6	178
145F	**VC5102.070**	20	112
145FSP	**VC5122.070**	8	113
145P	**VC5103.070**	10	112
145SP	**VC5123.070**	10	113
146	**VC5101.090**	20	112
146F	**VC5102.090**	10	112
146FSP	**VC5122.090**	8	113
146P	**VC5103.090**	4	112
146SP	**VC5123.090**	4	113
149.22.1	**VC5301.022**	8	116
149.22.2	**VC5302.022**	8	117
149.22.3	**VC5303.022**	8	117
149.30.1	**VC5301.030**	4	116
149.30.2	**VC5302.030**	4	117
149.30.3	**VC5303.030**	4	117
149T.30	**VC5300.030**	8	116
150	**VC5200.050**	4	114
150.90	**VL4131.090.L**	12	178
150.180	**VL4131.180.L**	6	178
150P	**VC5210.050**	2	115
151.30	**VC5201.030**	6	114
151.30P	**VC5211.030**	4	115
151.35	**VC5201.035**	6	114
151.35P	**VC5211.035**	4	115
151.40	**VC5201.040**	6	114
151.40P	**VC5211.040**	2	115
151.50	**VC5201.050**	4	114
151.50P	**VC5211.050**	2	115
151.60	**VC5201.060**	4	114
151.60P	**VC5211.060**	2	115
152.30	**VC5202.030**	6	114
152.35	**VC5202.035**	6	114
152.40	**VC5202.040**	6	114
152.50	**VC5202.050**	4	114
153.40	**VC5203.040**	4	115
155.180	**VL4132.180.L**	6	178
156	**VL9000.001.L**	100	192
157	**VL9000.002.L**	100	192
158	**VL9000.003.L**	100	192
159	**VA3601.035**	24	48
159C	**VA3602.035**	24	48
160	**VA3601.042**	12	48
160.180	**VL4133.180.L**	6	179
160C	**VA3602.042**	12	48
161	**VA3601.052**	12	48
161C	**VA3602.052**	12	48
163	**VA1102.160**	4	20
163/20	**VA1402.160**	4	29
164	**VA1202.160**	4	23
165	**VA1102.200**	2	20
165/20	**VA1402.200**	2	29
165.S	**VA3104.N38**	10	40
165.180	**VL4134.180.L**	6	179
166	**VA1202.200**	2	23
166.0	**VA3101.I52**	10	39
166.1	**VA3105.I52**	4	40
166.2	**VA3105.I52.1**	4	40
166.S	**VA3104.I52**	4	40
167	**VA1102.250**	1	20
167/20	**VA1402.250**	1	29
168	**VA1202.250**	1	23
169	**VA1102.250.2**	1	20
169/20	**VA1402.250.2**	1	29

ART.	COD.		PAG.
170	**VA1202.250.2**	1	23
170.180	**VL4135.180.L**	6	179
171	**VA1102.300**	1	20
171/20	**VA1402.300**	1	29
172	**VA1202.300**	1	23
173	**VA1102.300.2**	1	20
173/20	**VA1402.300.2**	1	29
174	**VA1202.300.2**	1	23
175.90	**VL4140.090.L**	12	180
175.180	**VL4140.180.L**	6	180
180.90	**VL4141.090.L**	12	180
180.180	**VL4141.180.L**	6	180
184	**VL2101.020.L**	160	168
184/Z	**VL2101.020**	160	168
185	**VL2101.030.L**	100	168
185.180	**VL4142.180.L**	6	180
185/Z	**VL2101.030**	100	168
186	**VL2101.040.L**	60	168
186/Z	**VL2101.040**	60	168
187	**VL2101.050.L**	50	168
187/Z	**VL2101.050**	50	168
187A	**VL2101.050.A**	50	168
188	**VL2101.060.L**	50	168
188/Z	**VL2101.060**	50	168
188A	**VL2101.060.A**	50	168
189	**VL2101.080.L**	30	168
189/Z	**VL2101.080**	30	168
189A	**VL2101.080.A**	30	168
190	**VL2101.100.L**	20	168
190.180	**VL4143.180.L**	6	181
190/Z	**VL2101.100**	20	168
190A	**VL2101.100.A**	20	168
191	**VL2101.120.L**	20	168
191/Z	**VL2101.120**	20	168
191A	**VL2101.120.A**	20	168
192	**VL2101.150.L**	30	168
192/Z	**VL2101.150**	30	168
192A	**VL2101.150.A**	30	168
193	**VL2101.175.L**	25	168
193.200	**VL2101.200.L**	20	168
193.200/Z	**VL2101.200**	20	168
193.200A	**VL2101.200.A**	20	168
193/Z	**VL2101.175**	25	168
194	**VL0100.150**	20	148
195	**VL0100.200**	20	148
195.180	**VL4144.180.L**	6	181
196	**VL0100.250**	10	148
197	**VL0100.300**	10	148
198	**VL0100.400**	10	148
1010	**VD1100.075**	2	129
1020	**VD1200.075**	2	130
1021	**VD1201.075**	2	130
1025	**VD1202.075**	10	131
1030	**VD1300.075**	2	132
1035	**VD1600.100**	2	135
1040	**VD1701.018**	1	136
1100.60	**VL4100.060.I**	24	174
1100.80	**VL4100.080.I**	24	174
1100.100	**VL4100.100.I**	24	174
1100.120	**VL4100.120.I**	24	174
1100.140	**VL4100.140.I**	24	174
1101	**VA1107.075.I**	6	22
1101/16	**VA1307.060.I**	6	28
1101/20	**VA1407.075.I**	6	31
1107	**VA1103.090.I**	6	20
1107/16	**VA1303.090.I**	6	27
1107/20	**VA1403.090.I**	6	30
1110.80	**VL4200.080.I**	24	182
1110.100	**VL4200.100.I**	24	182
1110.120	**VL4200.120.I**	24	182
1110.140	**VL4200.140.I**	24	182
1114	**VA3101.A40.I**	10	39
1115	**VA4101.092.I**	10	49
1115P	**VA4102.101.I**	2	50

ART.	COD.		PAG.
1116	**VA4101.115.I**	10	49
1116GP	**VA4102.121.I**	2	50
1117	**VA3101.A30.I**	10	39
1118	**VA3101.B40.I**	10	39
1119	**VA3101.I60.I**	4	39
1120	**VC2101.020.I**	10	97
1121	**VC2101.023.I**	10	97
1122	**VC2201.020.I**	10	99
1123	**VC2201.023.I**	10	99
1145	**VC5101.070.I**	10	112
1145P	**VC5103.070.I**	10	112
1146	**VC5101.090.I**	10	112
1146F	**VC5102.090.I**	10	112
1146P	**VC5103.090.I**	4	112
1185	**VL2101.030.I**	100	168
1186	**VL2101.040.I**	60	168
1187	**VL2101.050.I**	50	168
1188	**VL2101.060.I**	50	168
1189	**VL2101.080.I**	30	168
1190	**VL2101.100.I**	20	168
1191	**VL2101.120.I**	20	168
1192	**VL2101.150.I**	10	168
1193.200	**VL2101.200.I**	20	168
1207	**VA1103.120.I2**	2	20
1207/16	**VA1303.120.I2**	2	27
1207/20	**VA1403.120.I2**	2	30
1214	**VA3203.A40.I**	2	43
1217	**VA3203.A30.I**	2	43
1222	**VA3205.A30.I**	8	44
1222L	**VA3206.A30.I**	6	44
1223	**VA3205.B40.I**	4	44
1223L	**VA3206.B40.I**	3	44
1230	**VL0510.001.I**	50	162
1232.18	**VC1107.A18.I**	8	81
1232.18C	**VC1207.A18.I**	8	86
1232.22	**VC1107.A22.I**	6	81
1232.22C	**VC1207.A22.I**	6	86
1232.27	**VC1107.A27.I**	6	81
1232B.18	**VC1108.A18.I**	8	81
1232B.18C	**VC1208.A18.I**	8	86
1232B.22	**VC1108.A22.I**	6	81
1232B.22C	**VC1208.A22.I**	6	86
1232B.27	**VC1108.A27.I**	6	81
1239.404	**VC9101.400.I**	10	121
1239.505	**VC9101.500.I**	10	121
1260.40	**VC4101.040.I**	12	105
1260.50	**VC4101.050.I**	8	105
1260.60	**VC4101.060.I**	4	105
1265.40	**VC4201.040.I**	12	107
1265.50	**VC4202.050.I**	8	107
1265.60	**VC4202.060.I**	4	107
1267	**VL0540.003.I**	25	164
1300	**VL0201.270.I**	5	149
1300.18	**VC3101.C18.I**	10	102
1300.18C	**VC3201.C18.I**	10	103
1300.22	**VC3101.C22.I**	6	102
1300.22C	**VC3201.C22.I**	6	103
1301	**VA1101.060.I**	10	19
1303	**VA1101.075.I**	10	19
1305	**VA1101.090.I**	6	19
1305/16	**VA1301.090.I**	6	26
1305/20	**VA1401.090.I**	6	29
1307	**VA1101.120.I**	4	19
1309	**VA1101.160.I**	4	19
1317	**VA1101.140.I**	4	19
1405	**VA1101.100.I**	6	19
1405/16	**VA1301.100.I**	6	26
1407	**VA1101.120.I2**	2	19
1408	**VA1201.120.I2**	2	23
1409	**VA1101.140.I2**	4	19
1409/20	**VA1401.140.I2**	4	29
1412	**VA3103.N34.I**	10	40
1413	**VA1101.160.I2**	4	19
1413/20	**VA1401.160.I2**	4	29

ART.	COD.		PAG.
1414	**VA1201.160.I3**	4	23
1430	**VC1103.D18.I**	10	80
1430C	**VC1203.D18.I**	10	84
1431	**VC1102.A18.I**	10	79
1431C	**VC1202.A18.I**	10	84
1432	**VC1101.A18.I**	10	79
1432C	**VC1201.A18.I**	10	84
1433	**VC1103.D22.I**	6	80
1433C	**VC1203.D22.I**	6	84
1434	**VC1102.A22.I**	10	79
1434C	**VC1202.A22.I**	10	84
1435	**VC1101.A22.I**	10	79
1435C	**VC1201.A22.I**	10	84
1436	**VC1101.A27.I**	6	79
1454	**VA1301.120.I3**	2	26
1455	**VA1401.120.I2**	2	29
1456	**VA1301.160.I**	4	26
1630	**VA6200.001.I**	1	55
1635	**VA6211.025.I**	30	56
1716	**VA2301.006.I**	1	33
1716/3	**VA2301.003.I**	1	33
1716/3F	**VA2302.003.I**	1	33
1716F	**VA2302.006.I**	1	33
1720	**VA2401.006.I**	1	35
1720/3	**VA2401.003.I**	1	35
1720/3F	**VA2402.003.I**	1	35
1720F	**VA2402.006.I**	1	35
1910S	**VD1100.053.I**	2	129
1920	**VD1200.053.I**	2	130
1925	**VD1202.053.I**	10	131
1930	**VD1300.053.I**	2	132
1940	**VD1701.014.I**	1	136
11010	**VD1100.075.I**	2	129
11020	**VD1200.075.I**	2	130
11025	**VD1202.075.I**	10	131
11030	**VD1300.075.I**	2	132
1132.18	**VC1110.A18.I**	8	82
1132.18C	**VC1210.A18.I**	8	87
1132.22	**VC1110.A22.I**	6	82
1132.22C	**VC1210.A22.I**	6	87
11040	**VD1701.018.I**	1	136
12050	**VD1501.018.I**	2	134
2RC/45	**VB3211.045**	20	73
2RC/55	**VB3211.055**	8	73
2RF/24	**VB3201.024**	20	72
2RF/45	**VB3201.045**	20	72
2RF/55	**VB3201.055**	8	72
2RS	**VB3111.024**	20	71
24.1	**VB3101.024**	20	70
24.2	**VB3102.024**	20	70
24.3	**VB3103.024**	20	70
200.40	**VL2104.040.L**	60	169
200.40/Z	**VL2104.040**	60	169
200.50	**VL2104.050.L**	50	169
200.50/Z	**VL2104.050**	50	169
200.60	**VL2104.060.L**	50	169
200.60/Z	**VL2104.060**	50	169
200.80	**VL2104.080.L**	30	169
200.80/Z	**VL2104.080**	30	169
200.100	**VL2104.100.L**	20	169
200.100/Z	**VL2104.100**	20	169
200.120	**VL2104.120.L**	20	169
200.120/Z	**VL2104.120**	20	169
200.150	**VL2104.150.L**	30	169
200.150/Z	**VL2104.150**	30	169
200.180	**VL4145.180.L**	6	181
205.130	**VL0400.130**	10	158
205.300	**VL0400.300**	10	158
207	**VA1103.120.2**	2	20
207/16	**VA1303.120.2**	2	27
207/16R	**VA1303.120**	2	27
207/20	**VA1403.120.2**	2	30
207/R	**VA1103.120**	2	20
209	**VA1203.120.2**	2	24

ART.	COD.		PAG.
210.300	**VL0401.300**	10	158
210.600	**VL0401.600**	10	158
212	**VA3203.N34**	4	43
212L	**VA3204.N34**	6	43
214	**VA3203.A40**	3	43
214L	**VA3204.A40**	2	43
217	**VA3203.A30**	8	43
217L	**VA3204.A30**	6	43
218	**VA3203.B40**	3	43
218L	**VA3204.B40**	2	43
220	**VA3201.N34**	14	42
221	**VA3202.N34**	14	42
222	**VA3205.A30**	8	44
222L	**VA3206.A30**	6	44
223	**VA3205.B40**	4	44
223L	**VA3206.B40**	3	44
224L	**VA3207.B40**	4	44
225	**VL0500.001**	50	162
225.2.17	**VA3201.A30**	4	42
225.2.18	**VA3201.B40**	4	42
225.4.17	**VA3202.A30**	4	42
225.4.18	**VA3202.B40**	4	42
226.14	**VA3301.A40**	6	45
226.17	**VA3301.A30**	6	45
226.18	**VA3301.B40**	4	45
226.19	**VA3301.I60**	4	45
227.14	**VA3302.A40**	4	45
227.17	**VA3302.A30**	4	45
227.18	**VA3302.B40**	4	45
227.19	**VA3302.I60**	4	45
228.17	**VA3401.A30**	4	46
228.18	**VA3401.B40**	4	46
229.18	**VA3402.B40**	2	46
230	**VL0510.001**	50	162
230.18	**VC1104.A18**	20	80
230.18C	**VC1204.A18**	10	85
230.20	**VC1104.A20**	10	80
230.20C	**VC1204.A20**	10	85
230.22	**VC1104.A22**	12	80
230.22C	**VC1204.A22**	12	85
230.24	**VC1104.A24**	6	80
230.24C	**VC1204.A24**	6	85
230.27	**VC1104.A27**	6	80
230.27C	**VC1204.A27**	6	85
231	**VL0511.001**	50	162
231.18	**VC1105.A18**	8	80
231.18C	**VC1205.A18**	8	85
231.20	**VC1105.A20**	8	80
231.20C	**VC1205.A20**	8	85
231.22	**VC1105.A22**	6	80
231.22C	**VC1205.A22**	6	85
231.24	**VC1105.A24**	6	80
231.24C	**VC1205.A24**	6	85
231.27	**VC1105.A27**	6	80
231.27C	**VC1205.A27**	6	85
231B.18	**VC1106.A18**	8	81
231B.18C	**VC1206.A18**	8	85
231B.20	**VC1106.A20**	8	81
231B.20C	**VC1206.A20**	8	85
231B.22	**VC1106.A22**	6	81
231B.22C	**VC1206.A22**	6	85
231B.24	**VC1106.A24**	6	81
231B.24C	**VC1206.A24**	6	85
231B.27	**VC1106.A27**	6	81
231B.27C	**VC1206.A27**	6	85
232	**VL0520.002**	20	163
232.18	**VC1107.A18**	8	81
232.18C	**VC1207.A18**	8	86
232.20	**VC1107.A20**	8	81
232.20C	**VC1207.A20**	8	86
232.22	**VC1107.A22**	6	81
232.22C	**VC1207.A22**	6	86
232.24	**VC1107.A24**	6	81
232.24C	**VC1207.A24**	6	86

ART.	COD.		PAG.
232.27	**VC1107.A27**	6	81
232.27C	**VC1207.A27**	6	86
232B.18	**VC1108.A18**	8	81
232B.18C	**VC1208.A18**	8	86
232B.20	**VC1108.A20**	8	81
232B.20C	**VC1208.A20**	8	86
232B.22	**VC1108.A22**	6	81
232B.22C	**VC1208.A22**	6	86
232B.24	**VC1108.A24**	6	81
232B.24C	**VC1208.A24**	6	86
232B.27	**VC1108.A27**	6	81
232B.27C	**VC1208.A27**	6	86
232P	**VL0520.001**	20	163
233	**VL0521.001**	20	163
233.18C	**VC1213.A18**	8	88
233.22C	**VC1213.A22**	4	88
233.27C	**VC1213.A27**	4	88
236.18	**VC3301.B18**	6	104
236.18P	**VC3302.B18**	4	104
236.22	**VC3301.I22**	6	104
236.22P	**VC3302.I22**	2	104
239.404	**VC9101.400**	10	121
239.404B	**VC9111.400**	10	121
239.505	**VC9101.500**	10	121
239.505B	**VC9111.500**	10	121
240.18	**VC1304.A18**	10	89
240.18D	**VC1404.A18**	10	93
240.22	**VC1304.A22**	6	89
240.22D	**VC1404.A22**	6	93
240.27	**VC1304.A27**	4	89
240.27D	**VC1404.A27**	4	93
240.60D	**VL4210.06D.L**	20	182
240.60S	**VL4210.06S.L**	20	182
240.80D	**VL4210.08D.L**	20	182
240.80S	**VL4210.08S.L**	20	182
240.100D	**VL4210.10D.L**	16	182
240.100S	**VL4210.10S.L**	16	182
240.120D	**VL4210.12D.L**	16	182
240.120S	**VL4210.12S.L**	16	182
240.140D	**VL4210.14D.L**	16	182
240.140S	**VL4210.14S.L**	16	182
240.160D	**VL4210.16D.L**	16	182
240.160S	**VL4210.16S.L**	16	182
241.18	**VC1305.A18**	6	90
241.18D	**VC1405.A18**	6	93
241.22	**VC1305.A22**	4	90
241.22D	**VC1405.A22**	4	93
241.27	**VC1305.A27**	4	90
241.27D	**VC1405.A27**	4	93
241B.18	**VC1306.A18**	6	90
241B.18D	**VC1406.A18**	6	94
241B.22	**VC1306.A22**	4	90
241B.22D	**VC1406.A22**	4	94
241B.27	**VC1306.A27**	4	90
241B.27D	**VC1406.A27**	4	94
242.18	**VC1307.A18**	6	90
242.18D	**VC1407.A18**	6	94
242.22	**VC1307.A22**	4	90
242.22D	**VC1407.A22**	4	94
242.27	**VC1307.A27**	4	90
242.27D	**VC1407.A27**	4	94
242B.18	**VC1308.A18**	6	91
242B.18D	**VC1408.A18**	6	94
242B.22	**VC1308.A22**	4	91
242B.22D	**VC1408.A22**	4	94
242B.27	**VC1308.A27**	4	91
242B.27D	**VC1408.A27**	4	94
243.18	**VC1301.A18**	10	89
243.18D	**VC1401.A18**	10	93
243.22	**VC1301.A22**	6	89
243.22D	**VC1401.A22**	6	93
243.27	**VC1301.A27**	4	89
243.27D	**VC1401.A27**	4	93
243M.18	**VC1302.A18**	10	89

ART.	COD.		PAG.
243M.22	**VC1302.A22**	6	89
243M.27	**VC1302.A27**	4	89
245.30	**VC6211.030.L**	10	120
245.35	**VC6211.035.L**	6	120
245.40	**VC6211.040.L**	4	120
245.60D	**VL4220.06D.L**	12	183
245.60S	**VL4220.06S.L**	12	183
245.80D	**VL4220.08D.L**	12	183
245.80S	**VL4220.08S.L**	12	183
245.100D	**VL4220.10D.L**	12	183
245.100S	**VL4220.10S.L**	12	183
245.120D	**VL4220.12D.L**	12	183
245.120S	**VL4220.12S.L**	12	183
245.140D	**VL4220.14D.L**	10	183
245.140S	**VL4220.14S.L**	10	183
245.160D	**VL4220.16D.L**	10	183
245.160S	**VL4220.16S.L**	10	183
246.30	**VC6212.030.L**	10	120
246.35	**VC6212.035.L**	6	120
246.40	**VC6212.040.L**	4	120
246.L	**VC6212.035.L1**	6	120
247.18	**VC6201.030.L**	10	119
247.18F	**VC6101.030.L**	10	118
247.22	**VC6201.035.L**	6	119
247.22F	**VC6101.035.L**	6	118
247.27	**VC6201.040.L**	4	119
247.27F	**VC6101.040.L**	4	118
247.30	**VC6202.030.L**	10	119
247.30F	**VC6102.030.L**	10	118
247.35	**VC6202.035.L**	6	119
247.35F	**VC6102.035.L**	6	118
247.40	**VC6202.040.L**	4	119
247.40F	**VC6102.040.L**	4	118
249.140	**VL4110.140.L**	10	175
250.30	**VC2111.020.L**	10	98
250.35	**VC2111.023.L**	6	98
250.40	**VC2111.028.L**	4	98
250.110	**VL4112.110.L**	10	175
250.140	**VL4112.140.L**	10	175
250.170	**VL4112.170.L**	10	175
250.200	**VL4112.200.L**	10	175
251.30	**VC2112.020.L**	10	98
251.35	**VC2112.023.L**	6	98
251.40	**VC2112.028.L**	4	98
251.L	**VC2112.023.L1**	6	98
254.18	**VL4300.140.L**	20	184
254.20	**VL4300.140.L1**	12	184
254.22	**VL4300.150.L**	12	184
255.18	**VL4301.140.L1**	20	184
255.20	**VL4301.140.L2**	12	184
255.22	**VL4301.150.L**	12	184
255.30P	**VC2212.020**	10	101
255.30P.1	**VL6203.001**	1	190
255.30S	**VC2211.020.L**	10	100
255.30S.1	**VL6202.001**	1	190
255.35P	**VC2212.023**	6	101
255.35S	**VC2211.023.L**	6	100
255.40	**VL4301.040.L**	24	184
255.40P	**VC2212.028**	4	101
255.40S	**VC2211.028.L**	4	100
255.60	**VL4301.060.L**	24	184
255.80	**VL4301.080.L**	24	184
255.100	**VL4301.100.L**	24	184
255.120	**VL4301.120.L**	24	184
255.140	**VL4301.140.L**	24	184
256.18	**VL4302.140.L1**	20	185
256.20	**VL4302.140.L2**	12	185
256.22	**VL4302.150.L**	12	185
256.40	**VL4302.040.L**	24	185
256.60	**VL4302.060.L**	24	185
256.80	**VL4302.080.L**	24	185
256.100	**VL4302.100.L**	24	185
256.120	**VL4302.120.L**	24	185
256.140	**VL4302.140.L**	24	185

ART.	COD.		PAG.
257.18	**VL4303.140.L**	20	185
257.20	**VL4303.140.L1**	12	185
257.22	**VL4303.150.L**	12	185
258.22	**VL4304.150.L**	12	186
260.40	**VC4101.040**	12	105
260.50	**VC4101.050**	8	105
260.60	**VC4101.060**	4	105
260.70	**VC4101.070**	4	105
260.90	**VC4101.090**	1	105
261.60	**VC4103.060**	4	105
261.70	**VC4103.070**	4	105
262.40	**VC4111.040**	6	106
262.50	**VC4111.050**	6	106
262.60	**VC4111.060**	4	106
262.70	**VC4111.070**	4	106
262.90	**VC4111.090**	1	106
263.60	**VC4113.060**	4	106
263.70	**VC4113.070**	2	106
265	**VL0540.001.L**	20	164
265.40	**VC4201.040**	12	107
265.40P	**VC4221.040**	6	109
265.40T	**VC4231.040**	8	110
265.50	**VC4202.050**	8	107
265.50P	**VC4222.050**	6	109
265.50T	**VC4232.050**	8	110
265.60	**VC4202.060**	4	107
265.60P	**VC4222.060**	4	109
265.60T	**VC4232.060**	4	110
265.70	**VC4202.070**	4	107
265.70P	**VC4222.070**	4	109
265.70T	**VC4232.070**	4	110
265.90	**VC4202.090**	1	107
266	**VL0540.002.L**	25	164
266.60	**VC4203.060**	4	107
266.60T	**VC4233.060**	4	110
266.70	**VC4203.070**	4	107
266.70P	**VC4223.070**	4	109
266.70T	**VC4233.070**	4	110
267	**VL0540.003**	25	164
267.40	**VC4211.040**	8	108
267.50	**VC4212.050**	6	108
267.60	**VC4212.060**	4	108
267.70	**VC4212.070**	4	108
267.90	**VC4212.090**	1	108
268.60	**VC4213.060**	4	108
268.70	**VC4213.070**	2	108
270	**VL0543.001.L**	40	164
270.18	**VC1330.A18**	10	92
270.18D	**VC1430.A18**	10	96
270.22	**VC1330.A22**	10	92
270.22D	**VC1430.A22**	10	96
270.27	**VC1330.A27**	6	92
270.27D	**VC1430.A27**	6	96
271	**VL0543.002.L**	100	164
271.18	**VC9301.018**	10	123
271.22	**VC9301.022**	10	123
271.27	**VC9301.027**	6	123
272.18	**VC9302.018**	10	123
272.22	**VC9302.022**	10	123
272.27	**VC9302.027**	6	123
275.65	**VL4900.001.L**	20	187
275.85	**VL4900.002.L**	20	187
280D	**VL0530.01D**	12	163
280S	**VL0530.01S**	12	163
280.30	**VC4141.030**	12	106
280.50	**VC4141.050**	8	106
284.130	**VL0410.130**	10	158
284.180	**VL0410.180**	10	158
284.250	**VL0410.250**	10	158
285.30	**VC4241.030**	12	111
285.40	**VC4241.040**	12	111
285.50	**VC4241.050**	8	111
285.60	**VC4241.060**	8	111
285.150	**VL0411.150**	10	159

ART.	COD.		PAG.
285.200	**VL0411.200**	10	159
286.30	**VC4243.030**	12	111
286.35	**VC4243.035**	12	111
286.40	**VC4243.040**	12	111
286.50	**VC4243.050**	8	111
286.60	**VC4243.060**	8	111
286.200	**VL0412.200**	5	159
286.300	**VL0412.300**	5	159
286.400	**VL0412.400**	5	159
287.30	**VC2213.030**	6	101
287.30P	**VC2214.030**	6	101
287.40	**VC2213.040**	4	101
287.40P	**VC2214.040**	4	101
287.50	**VC2213.050**	4	101
287.50P	**VC2214.050**	4	101
287.180	**VL0413.180**	6	159
287.220	**VL0413.220**	6	159
287.270	**VL0413.270**	6	159
289.30	**VC2203.030**	6	100
289.30P	**VC2204.030**	6	100
289.40	**VC2203.040**	4	100
289.40P	**VC2204.040**	4	100
289.50	**VC2203.050**	4	100
289.50P	**VC2204.050**	4	100
290.50	**VL0420.050**	12	160
290.80	**VL0420.080**	12	160
290.100	**VL0420.100**	12	160
290.120	**VL0420.120**	12	160
295	**VL0101.200**	12	148
295.150	**VL0421.150.V**	10	160
295.200	**VL0421.200.V**	10	160
295.250	**VL0421.250.V**	10	160
295.300	**VL0421.300.V**	10	160
295.400	**VL0421.400.V**	10	160
295.500	**VL0421.500.V**	10	160
295.700	**VL0421.700.V**	6	160
296	**VL0101.250**	6	148
297	**VL0101.300**	6	148
298	**VL0101.400**	6	148
299	**VL0101.500**	6	148
2010S	**VD1100.100**	2	129
2020	**VD1200.100**	2	130
2021	**VD1201.100**	2	130
2025	**VD1202.100**	8	131
2030	**VD1300.100**	2	132
2031	**VD1301.100**	2	132
2050	**VD1501.018**	2	134
300.18	**VC3101.C18**	10	102
300.18C	**VC3201.C18**	10	103
300.22	**VC3101.C22**	6	102
300.22C	**VC3201.C22**	6	103
300.27	**VC3101.C27**	4	102
300.27C	**VC3201.C27**	4	103
301	**VA1101.060**	20	19
301/16	**VA1301.060**	20	26
301N	**VA1101.060.N**	20	19
302	**VA1201.060**	20	23
303	**VA1101.075**	10	19
303/16	**VA1301.075**	10	26
304	**VA1201.075**	10	23
305	**VA1101.090**	6	19
305.2	**VA1101.090.2**	6	19
305.350	**VL0430.350**	10	161
305.450	**VL0430.450**	10	161
305.600	**VL0430.600**	10	161
305.700	**VL0430.700**	10	161
305/16	**VA1301.090**	6	26
305/16.2	**VA1301.090.2**	6	26
305/20	**VA1401.090**	6	29
305/20.2	**VA1401.090.2**	6	29
306	**VA1201.090**	6	23
306.2	**VA1201.090.2**	6	23
307	**VA1101.120**	4	19
307/16	**VA1301.120**	4	26

ART.	COD.		PAG.
308	**VA1201.120**	4	23
309	**VA1101.160**	4	19
310	**VA1201.160**	4	23
310.500	**VL0431.500**	10	161
310.700	**VL0431.700**	10	161
311	**VA1101.200**	2	19
312	**VA1201.200**	2	23
313	**VA1101.160.2**	4	19
314	**VA1201.160.4**	4	23
315	**VA1101.200.2**	2	19
316	**VA1201.200.2**	2	23
317	**VA1101.140**	6	19
317/16	**VA1301.140**	6	26
318	**VA1201.140**	6	23
320/16	**VL0550.016**	10	164
320/20	**VL0550.020**	10	164
320/24	**VL0550.024**	10	164
321/20	**VL0551.020**	10	165
321/24	**VL0551.024**	10	165
322	**VL0552.024**	10	165
330	**VL5100.001.V**	6	188
331	**VL5100.002.V**	6	188
332	**VL5101.002.V**	6	188
340.20	**VL3200.020**	10	172
340.25	**VL3200.025**	10	172
340.30	**VL3200.030**	10	172
341	**VL3210.001**	10	172
350	**VL3101.001**	1	170
351/40	**VL3111.040**	20	171
351/50	**VL3111.050**	20	171
352/40	**VL3111.040.1**	20	171
352/50	**VL3112.050.1**	20	171
355.40	**VA4201.040.L**	10	51
355.50	**VA4201.050.L**	10	51
355.60	**VA4201.060.L**	10	51
355.80	**VA4201.080.L**	10	51
356.40	**VA4202.040.L**	6	51
356.50	**VA4202.050.L**	6	51
356.60	**VA4202.060.L**	6	51
356.80	**VA4202.080.L**	2	51
357.40	**VA4203.040.L**	10	51
357.50	**VA4203.050.L**	10	51
357.60	**VA4203.060.L**	10	51
357.80	**VA4203.080.L**	10	51
370G	**VL9301.040**	10	193
370P	**VL9301.030**	12	193
388.E	**VL6210.001**	1	190
388.I	**VL6200.001**	1	189
389.200	**VL6100.200**	10	189
389.280	**VL6100.280**	10	189
390	**VL0560.001**	5	165
391	**VL0560.002**	5	165
3010	**VD1102.140**	2	129
3010L	**VD1101.140**	1	129
3020	**VD1200.140**	2	130
3021	**VD1201.140**	2	130
3030	**VD1300.140**	2	132
3031	**VD1301.140**	2	132
3040	**VD1702.022**	1	136
3040L	**VD1701.022**	1	136
3050	**VD1502.022**	2	134
3050L	**VD1501.022**	2	134
4RC/45	**VB3212.045**	10	73
4RC/55	**VB3212.055**	4	73
4RF/24	**VB3202.024**	20	72
4RF/45	**VB3202.045**	10	72
4RF/55	**VB3202.055**	4	72
4RS	**VB3112.024**	20	71
40/T	**VA1401.040**	50	29
40/TN	**VA1401.040.N**	50	29
40/V	**VA1101.040**	50	19
40/VN	**VA1101.040.N**	50	19
42	**VL0200.310**	12	149
44	**VL0202.180**	6	149

ART.	COD.		PAG.
402	**VA1207.075.3**	6	25
405	**VA1101.100**	6	19
405.2	**VA1101.100.2**	4	19
405/16	**VA1301.100**	6	26
405/16.2	**VA1301.100.2**	4	26
405/20	**VA1401.100**	6	29
405/20.2	**VA1401.100.2**	4	29
406	**VA1201.100**	6	23
406.2	**VA1201.100.2**	4	23
407	**VA1101.120.2**	2	19
408	**VA1201.120.2**	2	23
409	**VA1101.140.2**	4	19
409/20	**VA1401.140.2**	4	29
410	**VA1201.140.2**	4	23
412	**VA3103.N34**	30	40
413	**VA1101.160.3**	4	19
413/20	**VA1401.160.2**	4	29
414	**VA1201.160.3**	4	23
415	**VA1101.200.3**	2	19
416	**VA1201.200.3**	2	23
430	**VC1103.D18**	10	80
430.20	**VC1103.D20**	10	80
430.24	**VC1103.D24**	6	80
430C	**VC1203.D18**	10	84
430C.20	**VC1203.D20**	10	84
430C.24	**VC1203.D24**	6	84
431	**VC1102.A18**	14	79
431.20	**VC1102.A20**	10	79
431.24	**VC1102.A24**	8	79
431C	**VC1202.A18**	14	84
431C.20	**VC1202.A20**	10	84
431C.24	**VC1202.A24**	8	84
432	**VC1101.A18**	20	79
432.1	**VL6211.A18**	1	191
432.20	**VC1101.A20**	20	79
432.24	**VC1101.A24**	10	79
432C	**VC1201.A18**	20	84
432C.20	**VC1201.A20**	20	84
432C.24	**VC1201.A24**	10	84
432F	**VC1120.B18**	8	83
432F.20	**VC1120.B20**	6	83
432FC	**VC1220.B18**	8	88
432FC.20	**VC1220.B20**	6	88
433	**VC1103.D22**	6	80
433C	**VC1203.D22**	6	84
434	**VC1102.A22**	10	79
434C	**VC1202.A22**	10	84
435	**VC1101.A22**	12	79
435C	**VC1201.A22**	12	84
435F	**VC1120.B22**	6	83
435FC	**VC1220.B22**	6	88
436	**VC1101.A27**	6	79
436C	**VC1201.A27**	6	84
437	**VC1102.A27**	6	79
437C	**VC1202.A27**	6	84
438	**VL2100.040.L**	120	168
438/Z	**VL2100.040**	120	168
439	**VL2100.050.L**	120	168
439/Z	**VL2100.050**	120	168
453	**VA1301.090.3**	6	26
454	**VA1301.120.3**	4	26
455	**VA1401.120.2**	2	29
456	**VA1301.160**	4	26
457	**VA1401.160.3**	4	29
458	**VA1401.200.2**	2	29
461	**VL2103.030.L**	250	169
461/Z	**VL2103.030**	250	169
462	**VL2103.033.L**	250	169
462/Z	**VL2103.033**	250	169
463	**VL2103.042.L**	160	169
463/Z	**VL2103.042**	160	169
464	**VL2103.048.L**	110	169
464/Z	**VL2103.048**	110	169
465	**VL2103.060.L**	70	169

ART.	COD.		PAG.
465/Z	**VL2103.060**	70	169
466	**VL2103.076.L**	50	169
466/Z	**VL2103.076**	50	169
467	**VL2103.090.L**	40	169
467/Z	**VL2103.090**	40	169
468	**VL2103.101.L**	36	169
468/Z	**VL2103.101**	36	169
469	**VL2103.114.L**	32	169
469/Z	**VL2103.114**	32	169
481	**VL2102.030.L**	100	169
481/Z	**VL2102.030**	100	169
482	**VL2102.040.L**	80	169
482/Z	**VL2102.040**	80	169
483	**VL2102.050.L**	130	169
483/Z	**VL2102.050**	130	169
484	**VL2102.060.L**	120	169
484/Z	**VL2102.060**	120	169
485	**VL2102.060.L1**	90	169
485/Z	**VL2102.060.1**	90	169
486	**VL2102.080.L**	100	169
486/Z	**VL2102.080**	100	169
487	**VL2102.100.L**	60	169
487/Z	**VL2102.100**	60	169
491.75	**VA1108.075**	6	22
491.90	**VA1108.090**	6	22
491.100	**VA1108.100**	6	22
491.120	**VA1108.120**	6	22
492.75	**VA1208.075**	6	25
492.100	**VA1208.100**	6	25
492.120	**VA1208.120**	6	25
493.75	**VA1308.075**	6	28
493.100	**VA1308.100**	6	28
493.100.20	**VA1408.100**	4	31
493.120	**VA1308.120**	6	28
496.100	**VA1108.100.2**	4	22
496.120	**VA1108.120.2**	6	22
497.100	**VA1208.100.2**	4	25
497.120	**VA1208.120.2**	6	25
498.100.16	**VA1308.100.2**	4	28
498.100.20	**VA1408.100.2**	4	31
498.120	**VA1408.120.2**	6	31
50/T	**VA1401.050**	30	29
50/TN	**VA1401.050.N**	30	29
50/V	**VA1101.050**	30	19
50/VN	**VA1101.050.N**	30	19
50E.12	**VL0302.012**	10	150
50E.16	**VL0302.016**	6	150
50EL.12	**VL0303.012**	10	151
50EL.16	**VL0303.016**	6	151
50ES.12	**VL0322.012**	10	154
50ES.16	**VL0322.016**	6	154
50ET.12	**VL0312.012**	10	153
50ET.16	**VL0312.016**	6	153
50F.12	**VL0300.012**	10	150
50F.16	**VL0300.016**	6	150
50FAD.16	**VL0330.016**	4	155
50FAS.16	**VL0331.016**	4	155
50FL.12	**VL0301.012**	10	150
50FL.16	**VL0301.016**	6	150
50FS.12	**VL0320.012**	10	154
50FS.16	**VL0320.016**	6	154
50FT.12	**VL0310.012**	10	152
50FT.16	**VL0310.016**	6	152
51.12	**VL0304.012**	10	151
51.16	**VL0304.016**	6	151
51AD.16	**VL0334.016**	4	156
51AS.16	**VL0335.016**	4	156
51L.12	**VL0305.012**	10	151
51L.16	**VL0305.016**	6	151
51S.12	**VL0324.012**	10	154
51S.16	**VL0324.016**	6	154
51T.12	**VL0314.012**	10	153
51T.16	**VL0314.016**	6	153
52.16	**VL0306.016**	6	152

ART.	COD.		PAG.
52L.16	**VL0307.016**	6	152
52S.16	**VL0326.016**	6	155
52T.16	**VL0316.016**	6	153
53.12	**VL0384.012**	20	157
53.16	**VL0384.016**	20	157
53E.12	**VL0382.012**	20	157
53E.16	**VL0382.016**	20	157
53F.12	**VL0380.012**	20	156
53F.16	**VL0380.016**	20	156
501	**VB1101.165**	30	63
501/F	**VB1102.165**	30	63
502	**VB1101.165.I**	30	63
502/F	**VB1102.165.I**	30	63
511	**VB1101.094**	20	63
511/F	**VB1102.094**	20	63
512	**VB1101.094.I**	20	63
512/F	**VB1102.094.I**	20	63
517	**VA3901.A30**	12	49
518	**VA3901.B40**	8	49
519	**VA3901.I60**	6	49
531	**VB1201.020.L**	10	64
532	**VB1202.020.L**	10	64
534	**VB1201.028.L**	10	64
535	**VB1202.028.L**	10	64
541	**VB1203.020**	10	64
542	**VB1204.020**	10	65
544	**VB1203.028**	10	64
545	**VB1204.028**	10	65
551	**VB1203.020.V**	10	64
552	**VB1204.020.V**	10	65
554	**VB1203.028.V**	10	64
555	**VB1204.028.V**	10	65
561	**VB1205.020**	10	65
562	**VB1206.020**	10	66
563	**VB1207.020**	10	66
564	**VB1205.028**	10	65
565	**VB1206.028**	6	66
566	**VB1207.028**	10	66
571	**VB1205.020.V**	10	65
572	**VB1206.020.V**	10	66
573	**VB1207.020.V**	10	66
574	**VB1205.028.V**	10	65
575	**VB1206.028.V**	6	66
576	**VB1207.028.V**	10	66
5100.105	**VL4400.105.L**	10	187
5100.125	**VL4400.125.L**	10	187
5100.150	**VL4400.150.L**	10	187
5300.12	**VC3102.C12**	8	102
5300.16	**VC3102.C16**	4	102
5300.20	**VC3102.C20**	6	102
5300.24	**VC3102.C24**	4	102
60/6N	**VA1301.060.N**	20	26
60/8N	**VA1401.060.N**	20	29
612	**VA3103.N34.O**	30	40
613	**VA3101.A25.O**	30	39
614	**VA3101.A40.O**	10	39
616/G	**VA2901.016**	1	37
616/Z	**VA2303.006**	1	34
616/Z3	**VA2303.003**	1	34
617	**VA3101.A30.O**	30	39
618	**VA3101.B40.O**	10	39
620/G	**VA2901.020**	1	37
620/Z	**VA2403.006**	1	36
620/Z3	**VA2403.003**	1	36
622/N1	**VA6101.401.L**	1	54
622/N2	**VA6101.402.L**	1	54
622/Z1	**VA6101.401**	1	54
622/Z2	**VA6101.402**	1	54
622/ZF	**VA6102.001**	1	54
622/ZF2	**VA6102.002**	1	54
625	**VA2904.016**	1	38
630/ZA	**VA6202.001**	1	56
630/ZA2	**VA6202.002**	1	56
630/ZF	**VA6200.001**	1	55

ART.	COD.		PAG.
630/ZF2	**VA6200.002**	1	55
630/ZS	**VA6201.001**	1	55
630/ZS2	**VA6201.002**	1	55
635/A	**VA6212.025**	30	56
635/S	**VA6211.025**	30	56
640/Z2	**VA6101.602**	1	54
701/Z	**VA2101.006**	1	32
701/Z3	**VA2101.003**	1	32
701/Z3F	**VA2102.003**	1	32
701/ZF	**VA2102.006**	1	32
716/Z	**VA2301.006**	1	33
716/Z3	**VA2301.003**	1	33
716/Z3F	**VA2302.003**	1	33
716/ZF	**VA2302.006**	1	33
720/Z	**VA2401.006**	1	35
720/Z3	**VA2401.003**	1	35
720/Z3F	**VA2402.003**	1	35
720/ZF	**VA2402.006**	1	35
721.75	**VA1103.075**	6	20
721.100	**VA1103.100**	4	20
721.140	**VA1103.140.2**	4	20
721.160	**VA1103.160.2**	4	20
721.200	**VA1103.200.2**	2	20
722.75	**VA1203.075**	6	24
722.100	**VA1203.100**	4	24
722.140	**VA1203.140.2**	4	24
722.160	**VA1203.160.2**	4	24
722.200	**VA1203.200.2**	2	24
723.75	**VA1303.075**	6	27
723.100	**VA1303.100**	4	27
723.100/20	**VA1403.100**	4	30
723.140	**VA1403.140.2**	4	30
723.160	**VA1403.160.2**	4	30
723.200	**VA1403.200.2**	2	30
726.75	**VA1105.075**	6	21
727.75	**VA1205.075**	6	24
728.75	**VA1305.075**	6	27
731.90	**VA1104.090**	6	21
731.120	**VA1104.120.2**	2	21
732.90	**VA1204.090**	6	24
732.120	**VA1204.120.2**	2	24
733.90/16	**VA1304.090**	6	27
733.90/20	**VA1404.090**	6	30
733.120/16	**VA1304.120.2**	2	27
733.120/20	**VA1404.120.2**	2	30
741.120	**VA1106.120.2**	2	21
741.160	**VA1106.160.2**	1	21
741.200	**VA1106.200.2**	1	21
742.120	**VA1206.120.2**	2	25
742.160	**VA1206.160.2**	1	25
742.200	**VA1206.200.2**	1	25
743.120	**VA1406.120.2**	2	30
743.160	**VA1406.160.2**	1	30
743.200	**VA1406.200.2**	1	30
750.100	**VC9202.100**	1	122
750.125	**VC9202.125**	2	122
755.100	**VC9201.100**	1	122
755.125	**VC9201.125**	2	122
810	**VD1100.044**	2	129
816/Z	**VA2304.006**	1	34
816/Z3	**VA2304.003**	1	34
816G	**VA2902.016**	1	38
820/Z	**VA2404.006**	1	36
820/Z3	**VA2404.003**	1	36
820G	**VA2902.020**	1	38
820K	**KA2404.006**	1	57
820K3	**KA2404.003**	1	57
823	**VD1203.044**	2	131
830Z	**VA2801.006**	1	37
830Z3	**VA2801.003**	1	37
833	**VD1303.044**	1	132
835	**VA2903.020**	1	38
840	**VD1701.012**	1	136
910.30	**VL3100.001**	1	170

ART.	COD.		PAG.
910S	**VD1100.053**	2	129
920	**VD1200.053**	2	130
923	**VD1203.053**	1	131
925	**VD1202.053**	10	131
930	**VD1300.053**	2	132
935	**VD1600.053**	2	135
940	**VD1701.014**	1	136
A10	**VL9010.010**	500	192
A12	**VL9010.012**	500	192
B12	**VL9011.012**	500	192
B60/6	**VA1310.060**	20	28
B60/8	**VA1410.060**	20	31
B75/6	**VA1310.075**	10	28
B75/8	**VA1410.075**	10	31
B90/6	**VA1310.090**	6	28
B90/8	**VA1410.090**	6	31
B100/6	**VA1310.100**	6	28
B100/8	**VA1410.100**	6	31
B120/6	**VA1310.120**	12	28
B120/8	**VA1410.120**	12	31
C35054	**VL3300.001**	10	173
D01.25.1	**VL1100.25A**	50	166
D01.25.1N	**VL1100.25A.L**	50	166
D01.25.2	**VL1100.25B**	50	166
D01.25.2N	**VL1100.25B.L**	50	166
D01.30.1	**VL1100.30A**	50	166
D01.30.1N	**VL1100.30A.L**	50	166
D01.30.2	**VL1100.30B**	50	166
D01.30.2N	**VL1100.30B.L**	50	166
D01.35.1	**VL1100.35A**	50	166
D01.35.1N	**VL1100.35A.L**	50	166
D01.35.2	**VL1100.35B**	50	166
D01.35.2N	**VL1100.35B.L**	50	166
D02.25.1	**VL1110.25A**	50	166
D02.25.1N	**VL1110.25A.L**	50	166
D02.25.2	**VL1110.25B**	50	166
D02.25.2N	**VL1110.25B.L**	50	166
D02.30.1	**VL1110.30A**	50	166
D02.30.1N	**VL1110.30A.L**	50	166
D02.30.2	**VL1110.30B**	50	166
D02.30.2N	**VL1110.30B.L**	50	166
D02.35.1	**VL1110.35A**	50	166
D02.35.1N	**VL1110.35A.L**	50	166
D02.35.2	**VL1110.35B**	50	166
D02.35.2N	**VL1110.35B.L**	50	166
D03.30.1	**VL1120.30A**	50	167
D03.30.1N	**VL1120.30A.L**	50	167
D03.35.1	**VL1120.35A**	50	167
D03.35.1N	**VL1120.35A.L**	50	167
D04.25.1	**VL1130.25A**	50	167
D04.25.1N	**VL1130.25A.L**	50	167
D04.30.1	**VL1130.30A**	50	167
D04.30.1N	**VL1130.30A.L**	50	167
D04.35.1	**VL1130.35A**	50	167
D04.35.1N	**VL1130.35A.L**	50	167
D05.30.1	**VL1140.30A**	50	167
D05.30.1N	**VL1140.30A.L**	50	167
D05.35.1	**VL1140.35A**	50	167
D05.35.1N	**VL1140.35A.L**	50	167
MC/25	**VB1301.025.C**	10	67
MC/35	**VB1301.035.C**	10	67
MC/40	**VB1301.040.C**	10	67
MC/50	**VB1301.050.C**	10	67
MV/25	**VB1301.025.V**	10	67
MV/35	**VB1301.035.V**	10	67
MV/40	**VB1301.040.V**	10	67
MV/50	**VB1301.050.V**	10	67
P.44	**VD1406.044.L**	1	133
P.44/3	**VD1403.044.L**	1	133
P.44Z	**VD1406.044**	1	133
P.44Z3	**VD1403.044**	1	133
P.53/3INOX	**VD1403.053.I**	1	133
P.53INOX	**VD1406.053.I**	1	133
P.53M	**VD1406.053.L**	1	133

ART.	COD.		PAG.
P.53M/3	**VD1403.053.L**	1	133
P.53MZ	**VD1406.053**	1	133
P.53MZ3	**VD1403.053**	1	133
P.75/3INOX	**VD1403.075.I**	1	133
P.75INOX	**VD1406.075.I**	1	133
P.75M	**VD1406.075.L**	1	133
P.75M/3	**VD1403.075.L**	1	133
P.75MZ	**VD1406.075**	1	133
P.75MZ3	**VD1403.075**	1	133
P.100LM	**VD1406.100.L**	1	133
P.100LM/3	**VD1403.100.L**	1	133
P.100LMZ	**VD1406.100**	1	133
P.100LMZ3	**VD1403.100**	1	133
P.140	**VD1406.140.L**	1	133
P.140/3	**VD1403.140.L**	1	133
P.140Z	**VD1406.140**	1	133
P.140Z3	**VD1403.140**	1	133
P.RF/24	**VB2106.024**	1	68
P.RF/24.3	**VB2103.024**	1	68
P.RF/45	**VB2106.045**	1	68
P.RF/45.3	**VB2103.045**	1	68
P.RF/55	**VB2106.055**	1	68
P.RF/55.3	**VB2103.055**	1	68
PM8	**VB3901.008**	20	74
PM20	**VB3902.020**	1	74
SP24	**VB2201.024**	10	69
SP45	**VB2201.045**	10	69
SP55	**VB2201.055**	6	69
SS24	**VB2202.024**	8	69
SS45	**VB2202.045**	6	69
SS55	**VB2202.055**	4	69

FAC srl

Via Bacchiglione, 6
36033 Isola Vicentina
Vicenza · ITALY

Tel. +39 0444 976241
Fax +39 0444 976936

info@facsrl.com
www.facsrl.com

DUDESIGN.IT

Ed. 06-2014

SISTEMA DI GESTIONE PER LA QUALITÀ CERTIFICATO = UNI EN ISO 9001:2008 =
SINCERT DNV